AGENDA
CITY OF GAUTIER, MISSISSIPPI
CITY HALL COUNCIL CHAMBERS
January 5, 2021 @ 6:30 PM

I. Call to Order

1. Prayer

2. Pledge of Allegiance

II. Agenda Order Approval

III. Announcements

1. Offices will be closed January 18, 2021 in observance of the birthdays for Martin Luther King, Jr. and Robert E. Lee

IV. Presentation Agenda

V. Business Agenda

1. Approval of the Docket of Claims

☐	STAFF PRESENTATION	☐	PUBLIC QUESTIONS/COMMENTS (3 MINUTES PER PERSON)	☐	MOTION COUNCIL DISCUSSION/QUESTIONS	☐	VOTE

VI. Consent Agenda (All items approved in one motion)

1. Authorization for Seymour Engineering, Sarah McLellan, to act as Joint Application Agent for the Rue Gentilly drainage project.

2. Resolution approving the continuation of a Declaration of Local Emergency pertaining to COVID-19.

3. Approval of Minutes from Recessed Council Meeting held December 15, 2020.

VII. STUDY AGENDA

1. **Discuss Citizen Comments**

2. **Discuss Council Comments**

3. **Discuss City Manager Comments**

4. **Discuss City Clerk Comments**

5. **Discuss City Attorney Comments**

Recess until January 19, 2021 at 6:30 pm
www.gautier-ms.gov

CITY OF GAUTIER, MISSISSIPPI
ANNOUNCEMENT AGENDA
January 5, 2021

ITEM DESCRIPTION:

ANNOUNCEMENTS

1. **Offices will be closed January 18, 2021 in observance of the birthdays for Martin Luther King, Jr. and Robert E. Lee.**

NOTES:

STATE HOLIDAYS

MISS. CODE ANN. § 3-3-7:

(1) Except as otherwise provided in subsection (2) of this section, the following are declared to be legal holidays, viz: the first day of January (New Year's Day); the third Monday of January (Robert E. Lee's birthday and Dr. Martin Luther King, Jr.'s birthday); the third Monday of February (Washington's birthday); the last Monday of April (Confederate Memorial Day); the last Monday of May (National Memorial Day and Jefferson Davis' birthday); the fourth day of July (Independence Day); the first Monday of September (Labor Day); the eleventh day of November (Armistice or Veterans' Day); the day fixed by proclamation by the Governor of Mississippi as a day of Thanksgiving, which shall be fixed to correspond to the date proclaimed by the President of the United States (Thanksgiving Day); and the twenty-fifth day of December (Christmas Day). In the event any holiday hereinbefore declared legal shall fall on Sunday, then the next following day shall be a legal holiday.

(2) In lieu of any one (1) legal holiday provided for in subsection (1) of this section, with the exception of the third Monday in January (Robert E. Lee's and Martin Luther King, Jr.'s birthday) and the eleventh day of November (Armistice or Veterans Day), the governing authorities of any municipality or county may declare, by order spread upon its minutes, Mardi Gras Day or any one (1) other day during the year, to be a legal holiday.

(3) August 16 is declared to be Elvis Aaron Presley Day in recognition and appreciation of Elvis Aaron Presley's many contributions, international recognition and the rich legacy left to us by Elvis Aaron Presley. This day shall be a day of recognition and observation and shall not be recognized as a legal holiday.

(4) May 8 is declared to be Hernando de Soto Day in recognition, observation and commemoration of Hernando de Soto, who led the first and most imposing expedition ever made by Europeans into the wilds of North America and the State of Mississippi, and in further recognition of the Spanish explorer's 187-day journey from the Tombigbee River basin on our state's eastern boundary, westward to the place of discovery of the Mississippi River on May 8, 1541. This day shall be a day of commemoration, recognition and observation of Hernando de Soto and European exploration and shall not be recognized as a legal holiday.

(5) Armistice Day (Veterans Day) shall be observed by appropriate exercises in all the public schools in the State of Mississippi. The superintendent of schools of each public school district is authorized to provide for the appearance of uniformed military personnel, uniformed veterans or the families of fallen military personnel/veterans at such public school exercises in honor of Armistice (Veterans) Day. The superintendent of schools is also authorized to permit the school band and its director(s) at any public school in the district to perform at Armistice (Veterans) Day exercises in the school district upon the request of public officials or veterans associations without loss of any program credit by participating students and without loss of leave by participating school personnel.

Holiday Proclamations from the Governor:

- New Year's Day (/Education-Publications/Pages/Proclamation-New-Years-Day.aspx)
- Independence Day -- July Fourth (/content/documents/ed_pubs/holidays /Proclamation_July42020.pdf)
- Veteran's Day -- November 11 (/content/documents/ed_pubs/holidays /Veteran%27s%20Day%202019%20Holiday%20Notice.pdf)
- Thanksgiving Day, Christmas Day, and New Year's Day (/content/documents/ed_pubs /holidays /Thanksgiving%20Christmas%20and%20New%20Year%27s%20Holidays%202019.pdf)

CITY OF GAUTIER, MISSISSIPPI
PRESENTATION AGENDA
January 5, 2021

ITEM DESCRIPTION:

PRESENTATION

None

NOTES:

CITY OF GAUTIER
Business Agenda Item #1
Fact Sheet

Council Meeting: January 5, 2021
Title: Approval of the Docket of Claims

Introduced by:
Contact Person/Telephone Teresa Montgomery 497-8000

Summary Explanation: Approval of the Docket of Claims.

EXHIBITS FOR REVIEW

Resolution	☐
Ordinance	☐
Contract/Agreement	☐
Minutes	☐
Plan Maps	☐
Order	☒
Other	☐
Submittal Authorization	City Manager

Staff Recommendation:
Approval

Motion Made by:													
Torjusen	☐	Martin	☐	George	☐	Jackson	☐	Vaughan	☐	Anderson	☐	Colledge	☐

Second Made by:													
Torjusen	☐	Martin	☐	George	☐	Jackson	☐	Vaughan	☐	Anderson	☐	Colledge	☐

Voted as follows:		Ayes	Nays	Abstained	Absent
Mayor	Torjusen	☐	☐	☐	☐
At Large	Martin	☐	☐	☐	☐
Ward 1	George	☐	☐	☐	☐
Ward 2	Jackson	☐	☐	☐	☐
Ward 3	Vaughan	☐	☐	☐	☐
Ward 4	Anderson	☐	☐	☐	☐
Ward 5	Colledge	☐	☐	☐	☐

Action Taken:

There came for consideration of the Mayor and Members of the Council of the City of Gautier, Mississippi, the following:

ORDER NUMBER 000-2021

WHEREAS, Miss. Code Ann. 21-39-9 requires governing authority to review all unpaid claims and determine if there is an obligation. An obligation exists if the related materials and supplies were properly contracted for and received by the municipality; and

IT IS HEREBY ORDERED by the Mayor and Members of the Council of the City of Gautier, Mississippi, that Docket of Claims is hereby approved, provided that all entries thereon are true, correct, properly entered and not fraudulent.

IT IS FURTHER ORDERED that the City Manager or City Clerk is authorized to execute any and all documents necessary.

Motion was made by **BLANK,** seconded by **BLANK,** and the following vote was recorded:

AYES:

NAYS:

_____
MAYOR

ATTEST:

_____
CITY CLERK

BLANK by Mayor and Members of the Council of the City of Gautier, Mississippi, at the meeting of January 5, 2021.

Docket of Claims
Release date from 01/05/2021 thru 01/05/2021

Fund	Name of Claimant	Trans #	Release Date	Claim Date	Claim Number	Check Number	Claim Amount	Approved/Disapproved
001	TEC	210686	01/05/2021	12/09/2020			115.83	
	Account Number / Description			Invoice #	Date	P.O.	Amount	
	001-092-605 MONTHLY LONG DISTANCE			1009740	12/01/2020			115.83
001	CINTAS CORPORATION NO 2	210687	01/05/2021	12/10/2020			312.28	
	Account Number / Description			Invoice #	Date	P.O.	Amount	
	001-205-535 MAINTENANCE			4066330323	11/04/2020			78.07
	001-205-535 MAINTENANCE			4067009610	11/11/2020			78.07
	001-205-535 MAINTENANCE			4067693403	11/18/2020			78.07
	001-205-535 MAINTENENCE			4068661191	11/24/2020			78.07
001	AT&T INTERSTATE DED PRIVATE LINE SERVS	210688	01/05/2021	12/10/2020			219.01	
	Account Number / Description			Invoice #	Date	P.O.	Amount	
	001-100-699 ACCUNET TI.5 DIGITAL SERV			3123251467	12/01/2020			219.01
001	DELTA SANITATION OF MS LLC	210699	01/05/2021	12/15/2020			35.00	
	Account Number / Description			Invoice #	Date	P.O.	Amount	
	001-170-698 FRAZIER PORT O LET			0001124411	11/30/2020			35.00
001	SPARKLIGHT	210700	01/05/2021	12/15/2020			91.88	
	Account Number / Description			Invoice #	Date	P.O.	Amount	
	001-100-699 DEC 2020 SUBSTN: #107718827			12012020	12/08/2020			91.88
001	EMILY M CUMBEST	210703	01/05/2021	12/16/2020			86.50	
	Account Number / Description			Invoice #	Date	P.O.	Amount	
	001-040-681 PER DIEM REIMB: CLERK TRNG			12092020	12/11/2020			86.50
001	SHERRY FARABEE	210704	01/05/2021	12/16/2020			68.76	
	Account Number / Description			Invoice #	Date	P.O.	Amount	
	001-040-681 PER DIEM REIMB: CLERK TRNG			12092020	12/11/2020			68.76
001	COMM-TECH SOLUTIONS INC	210705	01/05/2021	12/16/2020			75.00	
	Account Number / Description			Invoice #	Date	P.O.	Amount	
	001-092-639 PROGRAM CHANGE: CITY HALL			16723	12/02/2020			75.00
001	COMM-TECH SOLUTIONS INC	210706	01/05/2021	12/16/2020			75.00	
	Account Number / Description			Invoice #	Date	P.O.	Amount	
	001-100-699 TROUBLESHOOT LINE: 497-8036			16722	10/14/2020			75.00
001	FOSTERS A/C & HEATING INC	210707	01/05/2021	12/16/2020			474.50	
	Account Number / Description			Invoice #	Date	P.O.	Amount	
	001-092-635 ESA CLEANING: CITY HALL (6)			P1068649	12/07/2020			474.50
001	PITNEY BOWES GLOBAL FINANCIAL SERVS	210708	01/05/2021	12/16/2020			422.97	
	Account Number / Description			Invoice #	Date	P.O.	Amount	
	001-092-698 LEASE PMT: POSTAGE MACHINE			3312541753	12/06/2020			422.97

Docket of Claims
Release date from 01/05/2021 thru 01/05/2021

Fund	Name of Claimant	Trans #	Release Date	Claim Date	Claim Number	Check Number	Claim Amount	Approved/Disapproved
001	GOVERNMENT BRANDS SHARED SERVICES	210712	01/05/2021	12/15/2020			1,495.00	
	Account Number / Description			Invoice #	Date	P.O.	Amount	
	001-010-698 DEC 2020 COURT CHARGES			INV204278	12/01/2020			1,495.00
001	AIRGAS USA LLC	210713	01/05/2021	12/16/2020			215.89	
	Account Number / Description			Invoice #	Date	P.O.	Amount	
	001-205-588 CYLINDER RENTAL			9975622548	11/30/2020			215.89
001	BLOSSMAN GAS INC	210714	01/05/2021	12/16/2020			324.34	
	Account Number / Description			Invoice #	Date	P.O.	Amount	
	001-161-630 PROPANE GAS: NORTH STN			11311968	11/19/2020			324.34
001	FUELMAN	210716	01/05/2021	12/17/2020			2,114.34	
	Account Number / Description			Invoice #	Date	P.O.	Amount	
	001-100-525 UNL FUEL			NP59300258	12/14/2020			1,517.61
	001-161-525 UNL & DSL FUEL			NP59300258	12/14/2020			246.89
	001-170-525 UNL & DSL FUEL			NP59300258	12/14/2020			206.64
	001-205-525 UNL & DSL FUEL			NP59300258	12/14/2020			143.20
001	DELTA COMPUTER SYSTEMS INC	210718	01/05/2021	12/17/2020			541.00	
	Account Number / Description			Invoice #	Date	P.O.	Amount	
	001-092-698 JAN 2021 ACCT SOFTWARE MAINT			MN141946	12/15/2020			370.00
	001-092-698 JAN 2021 PRIV LIC SW MAINT			MN141947	12/15/2020			150.00
	001-092-698 JAN 2021 VOTER REG SW MAINT			MNHR003373	12/15/2020			21.00
001	AT&T GLOBAL NETWORK SERVS LLC	210719	01/05/2021	12/17/2020			229.64	
	Account Number / Description			Invoice #	Date	P.O.	Amount	
	001-100-699 NCIC EQUIPMENT CHARGES			GI12561	12/01/2020			229.64
001	SPARKLIGHT	210720	01/05/2021	12/17/2020			71.37	
	Account Number / Description			Invoice #	Date	P.O.	Amount	
	001-100-699 DEC CABLE BOX: #118476316			12012020	12/08/2020			71.37
001	SPARKLIGHT	210721	01/05/2021	12/17/2020			213.68	
	Account Number / Description			Invoice #	Date	P.O.	Amount	
	001-100-699 DEC 2020: #107718371			12012020	12/08/2020			213.68
001	GLOBALSTAR	210734	01/05/2021	12/22/2020			88.99	
	Account Number / Description			Invoice #	Date	P.O.	Amount	
	001-092-605 MONTHLY SERVICE			0009324883	12/16/2020			88.99
001	COG 7M BOND ACCT	210736	01/05/2021	12/22/2020			36,899.00	
	Account Number / Description			Invoice #	Date	P.O.	Amount	
	001-900-969 BUDGETED DS INT TRX			02012020	01/05/2020			36,899.00
001	BROADCAST MUSIC INC	210739	01/05/2021	12/22/2020			364.00	
	Account Number / Description			Invoice #	Date	P.O.	Amount	
	001-092-698 ANNUAL FEE 2427468 4/20-3/21			38842224	12/02/2020			364.00

Docket of Claims
Release date from 01/05/2021 thru 01/05/2021

Fund	Name of Claimant	Trans #	Release Date	Claim Date	Claim Number	Check Number	Claim Amount	Approved/Disapproved
001	VIRTUAL DOXX CORPORATION	210748	01/05/2021	12/22/2020			2,560.00	
	Account Number / Description			Invoice #	Date	P.O.	Amount	
	001-100-699 ANNUAL MAINT 4/20-3/21			20-0067	04/01/2020			2,560.00
001	WASTE OIL COLLECTORS INC	210749	01/05/2021	12/22/2020			80.00	
	Account Number / Description			Invoice #	Date	P.O.	Amount	
	001-205-698 STOP CHG: PUMP USED OIL			0024325	12/17/2020			80.00
001	FUELMAN	210750	01/05/2021	12/22/2020			1,964.69	
	Account Number / Description			Invoice #	Date	P.O.	Amount	
	001-090-525 UNL FUEL			NP59329215	12/21/2020			53.39
	001-100-525 UNL FUEL			NP59329215	12/21/2020			1,324.49
	001-161-525 UNL & DSL FUEL			NP59329215	12/21/2020			384.62
	001-170-525 UNL FUEL			NP59329215	12/21/2020			160.54
	001-205-525 UNL FUEL			NP59329215	12/21/2020			41.65
001	MSC 7511	210772	01/05/2021	12/28/2020			231.95	
	Account Number / Description			Invoice #	Date	P.O.	Amount	
	001-100-699 FNK100-01 RENTAL FEE			INV3996000	12/16/2020			169.58
	001-100-699 MPC2504EX USAGE: COLOR			INV3996000	12/16/2020			62.37
001	C SPIRE WIRELESS	210773	01/05/2021	12/28/2020			512.33	
	Account Number / Description			Invoice #	Date	P.O.	Amount	
	001-100-605 POLICE CELLS			0032680896	11/12/2020			512.33
001	AT&T	210774	01/05/2021	12/28/2020			339.38	
	Account Number / Description			Invoice #	Date	P.O.	Amount	
	001-092-605 MONTHLY SERVICE			2284972172	12/14/2020			339.38
001	SPARKLIGHT	210775	01/05/2021	12/28/2020			83.32	
	Account Number / Description			Invoice #	Date	P.O.	Amount	
	001-161-698 JAN 2021: NFD #122024383			12162020	12/22/2020			83.32
001	SPARKLIGHT	210776	01/05/2021	12/28/2020			83.32	
	Account Number / Description			Invoice #	Date	P.O.	Amount	
	001-161-698 JAN 2021: SFD #122025091			12162020	12/23/2020			83.32
001	SPARKLIGHT	210777	01/05/2021	12/28/2020			83.32	
	Account Number / Description			Invoice #	Date	P.O.	Amount	
	001-161-698 JAN 2021: CFD #122024086			12162020	12/23/2020			83.32
001	MSC 7511	210778	01/05/2021	12/28/2020			113.14	
	Account Number / Description			Invoice #	Date	P.O.	Amount	
	001-161-698 GEMG00-01 RENTAL FEE			INV4006734	12/22/2020			113.14
001	MSC 7511	210779	01/05/2021	12/28/2020			470.88	
	Account Number / Description			Invoice #	Date	P.O.	Amount	
	001-092-698 GSHZ00-01 RENTAL FEE			INV3995965	12/16/2020			470.88

Docket of Claims
Release date from 01/05/2021 thru 01/05/2021

Fund	Name of Claimant	Trans #	Release Date	Claim Date	Claim Number	Check Number	Claim Amount	Approved/Disapproved
001	SINGING RIVER ELECTRIC COOPERATIVE	210783	01/05/2021	12/28/2020			494.79	

Account Number	Description	Invoice #	Date	P.O.	Amount
001-161-631	BROWN FD 95237002	12152020	12/22/2020		287.99
001-161-631	MARTIN BLUFF FD 58380001	12162020	12/23/2020		211.72
001-161-631	CAPITAL REFUND 58380001	12162020	12/23/2020		-159.44
001-092-631	CITY LIMIT SIGN 17546	12152020	12/23/2020		27.17
001-201-629	SIGNAL LIGHTS 17546	12162020	12/23/2020		32.80
001-100-631	MBLUFF SUB STN 58521002	12162020	12/23/2020		94.55

Fund	Name of Claimant	Trans #	Release Date	Claim Date	Claim Number	Check Number	Claim Amount	Approved/Disapproved
001	AT&T	210785	01/05/2021	12/28/2020			35.96	

Account Number	Description	Invoice #	Date	P.O.	Amount
001-100-699	NCIC TELECOM	2284970262	12/14/2020		35.96

Fund	Name of Claimant	Trans #	Release Date	Claim Date	Claim Number	Check Number	Claim Amount	Approved/Disapproved
001	AT&T	210786	01/05/2021	12/28/2020			168.58	

Account Number	Description	Invoice #	Date	P.O.	Amount
001-092-605	MONTHLY SERVICE	2284977070	12/14/2020		168.58

Fund	Name of Claimant	Trans #	Release Date	Claim Date	Claim Number	Check Number	Claim Amount	Approved/Disapproved
001	AT&T	210787	01/05/2021	12/28/2020			3,176.73	

Account Number	Description	Invoice #	Date	P.O.	Amount
001-092-605	MONTHLY SERVICE	2284978000	12/14/2020		3,176.73

Fund	Name of Claimant	Trans #	Release Date	Claim Date	Claim Number	Check Number	Claim Amount	Approved/Disapproved
001	FUELMAN	210788	01/05/2021	12/28/2020			1,611.09	

Account Number	Description	Invoice #	Date	P.O.	Amount
001-100-525	UNL & DSL FUEL	NP59347889	12/28/2020		1,363.23
001-161-525	UNL & DSL FUEL	NP59347889	12/28/2020		203.86
001-205-525	DSL FUEL	NP59347889	12/28/2020		44.00

Fund	Name of Claimant	Trans #	Release Date	Claim Date	Claim Number	Check Number	Claim Amount	Approved/Disapproved
001	ALABAMA MEDIA GROUP	210792	01/05/2021	12/29/2020			11.64	

Account Number	Description	Invoice #	Date	P.O.	Amount
001-040-615	SAP ORDINANCE #257-2020	0009813154	12/02/2020	210188	11.64

Fund	Name of Claimant	Trans #	Release Date	Claim Date	Claim Number	Check Number	Claim Amount	Approved/Disapproved
001	CAN'T MISS EMBROIDERY	210794	01/05/2021	12/29/2020			1,261.64	

Account Number	Description	Invoice #	Date	P.O.	Amount
001-100-535	EMBROIDER GPD BADGE (10)	25100	12/15/2020	210202	77.50
001-100-535	EMBROIDER GAUTIER POLICE (10)	25100	12/15/2020	210202	45.00
001-100-535	NAVY POLO	24887	12/15/2020	210091	26.98
001-100-535	MAROON POLO	24887	12/15/2020	210091	26.98
001-100-535	GREEN POLO (2)	24887	12/15/2020	210091	53.96
001-100-535	NAVY POLO (3)	24887	12/15/2020	210091	77.94
001-100-535	MAROON POLO (2)	24887	12/15/2020	210091	51.96
001-100-535	BLUE POLO (2)	24887	12/15/2020	210091	51.96
001-100-535	GREEN POLO	24887	12/15/2020	210091	25.98
001-100-535	RED POLO (2)	24887	12/15/2020	210091	51.96
001-100-535	BLACK POLO	24887	12/15/2020	210091	25.98
001-100-535	DRI MESH POLO SANDSTONE	24887	12/15/2020	210091	25.98
001-100-535	DRI MESH POLO NAVY (24)	24887	12/15/2020	210091	623.52
001-100-535	DRY ZONE POLO (3)	24887	12/15/2020	210091	80.94
001-100-535	XL SIZE UPCHARGE	24887	12/15/2020	210091	15.00

Docket of Claims
Release date from 01/05/2021 thru 01/05/2021

Fund	Name of Claimant	Trans #	Release Date	Claim Date	Claim Number	Check Number	Claim Amount	Approved/Disapproved
001	HATTIESBURG COMPUTER SUPPLIES INC	210797	01/05/2021	12/29/2020			192.40	

Account Number	Description	Invoice #	Date	P.O.	Amount
001-040-500	BLANK 1099 PAGES (200)	9382	12/26/2020	210114	65.00
001-040-500	LASER W2 (200)	9382	12/26/2020	210114	60.00
001-040-500	1099 NEC-MISC ENVELOPES (150)	9382	12/26/2020	210162	49.00
001-040-500	FREIGHT	9382	12/26/2020	210162	18.40

Fund	Name of Claimant	Trans #	Release Date	Claim Date	Claim Number	Check Number	Claim Amount	Approved/Disapproved
001	PRECISION DELTA CORPORATION	210798	01/05/2021	12/29/2020			773.50	

Account Number	Description	Invoice #	Date	P.O.	Amount
001-100-559	.223 REM 55GR 1000 RD/CS	18280	12/16/2020	200850	773.50

Fund	Name of Claimant	Trans #	Release Date	Claim Date	Claim Number	Check Number	Claim Amount	Approved/Disapproved
001	CUSTOM PRODUCTS CORPORATION	210800	01/05/2021	12/29/2020			1,438.85	

Account Number	Description	Invoice #	Date	P.O.	Amount
001-201-565	30X30 DO NOT ENTER (2)	3452220	12/17/2020	210224	98.02
001-201-565	24X30 KEEP OFF MEDIAN (5)	3452220	12/17/2020	210224	204.25
001-201-565	18X24 SPEED BUMPS AHEAD (12)	3452220	12/17/2020	210224	261.48
001-201-565	6X36 STREET SIGNS (26)	3452220	12/17/2020	210224	497.64
001-201-565	FREIGHT	3452220	12/17/2020	210224	89.36
001-201-565	FREIGHT	344628	12/04/2020	210224	26.62
001-201-565	18X24 SPEED LIMIT 25 (12)	344628	12/04/2020	210224	261.48

Fund	Name of Claimant	Trans #	Release Date	Claim Date	Claim Number	Check Number	Claim Amount	Approved/Disapproved
001	MS TROPHY LLC	210801	01/05/2021	12/29/2020			66.90	

Account Number	Description	Invoice #	Date	P.O.	Amount
001-100-535	NAME-SERVING BARS (2)	14322	12/04/2020	210190	66.90

Fund	Name of Claimant	Trans #	Release Date	Claim Date	Claim Number	Check Number	Claim Amount	Approved/Disapproved
001	SUN HERALD	210805	01/05/2021	12/29/2020			253.06	

Account Number	Description	Invoice #	Date	P.O.	Amount
001-040-615	BEASLY RD & RIVERSIDE AD	I04812585	11/20/2020	210168	123.34
001-040-615	TOWN COMMONS ADVERTISEMENT	I04812587	11/20/2020	210167	129.72

Fund	Name of Claimant	Trans #	Release Date	Claim Date	Claim Number	Check Number	Claim Amount	Approved/Disapproved
001	LAW ENFORCEMENT SEMINARS LLC	210806	01/05/2021	12/29/2020			385.00	

Account Number	Description	Invoice #	Date	P.O.	Amount
001-100-681	BKGRND INV SEM: KILLINGSWORTH	201303	12/09/2020	210260	385.00

Fund	Name of Claimant	Trans #	Release Date	Claim Date	Claim Number	Check Number	Claim Amount	Approved/Disapproved
001	STAPLES BUSINESS ADVANTAGE DEPT ATL	210808	01/05/2021	12/29/2020			2,104.06	

Account Number	Description	Invoice #	Date	P.O.	Amount
001-100-500	ENERGEL PENS BLUE DZ	3462760504	11/25/2020	210182	12.98
001-100-500	UNIBALL GEL PEN BLACK DZ	3462760504	11/25/2020	210182	8.22
001-100-500	UNIBALL SIGNO PEN 36PK	3462760504	11/25/2020	210182	64.72
001-100-500	DESK CALENDARS 2021(15)	3462760504	11/25/2020	210182	105.90
001-100-500	DATASTICK PRO 32GB 10PK	3462760504	11/25/2020	210182	59.95
001-100-500	9X12 HD CLASP ENV 100/BX	3462760504	11/25/2020	210182	15.42
001-100-500	CERTIFICATE PAPER 100PK	3462760504	11/25/2020	210182	10.20
001-100-500	LEGAL NOTEPADS 12PK	3462760504	11/25/2020	210182	9.99
001-100-500	3 RING BINDER BLACK 12CT	3462760504	11/25/2020	210182	37.99
001-100-500	STACKABLE TRAY LETTER 6PK	3462760504	11/25/2020	210182	20.48
001-100-500	TWO POCKET FOLDER 25/BX	3462760504	11/25/2020	210182	14.44
001-100-500	HARDBOARD CLIPBOARD LETTER	3462760504	11/25/2020	210182	2.68
001-100-500	SHARPIE HIGHLIGHTER 36PK	3462760504	11/25/2020	210182	13.84
001-100-500	STAPLES INVISIBLE TAPE 12PK	3462760504	11/25/2020	210182	6.44

Docket of Claims
Release date from 01/05/2021 thru 01/05/2021

Fund	Name of Claimant	Trans #	Release Date	Claim Date	Claim Number	Check Number	Claim Amount	Approved/Disapproved
001	STAPLES BUSINESS ADVANTAGE DEPT ATL	210808	01/05/2021	12/29/2020			2,104.06	(CONTINUED)

Account Number	Description	Invoice #	Date	P.O.	Amount
001-100-500	BIC WITE OUT TAPE 18PK	3462760504	11/25/2020	210182	16.74
001-100-500	PILOT G2 RETRACTABLE PEN DZ	3462760504	11/25/2020	210182	10.99
001-100-500	PAPER CLIPS JUMBO 100/BX	3462760504	11/25/2020	210182	.56
001-100-500	8" SCISSOR	3462760504	11/25/2020	210182	2.08
001-100-500	PUSH PINS 100PK	3462760504	11/25/2020	210182	1.86
001-100-500	DESKTOP TAPE DISPENSER	3462760504	11/25/2020	210182	4.98
001-100-500	SWINGLINE GRIP STAPLER	3462760504	11/25/2020	210182	22.37
001-100-500	STCKIES STAND NOTE 3X3 12PK	3462760504	11/25/2020	210182	4.12
001-100-500	BIC ROLLER PENS DZ	3462760504	11/25/2020	210182	10.55
001-100-500	EXPO DRY ERASE SET-KIT	3462760510	11/25/2020	210182	14.11
001-100-500	BLANK PP DIVIDERS 8-TAB (2)	3462865287	11/26/2020	210182	13.02
001-100-500	ADJUST THREE HOLE PUNCH	3462865287	11/26/2020	210182	3.92
001-100-500	STAPLES 18X24 CORKBOARD FRAME	3462865290	11/26/2020	210182	43.54
001-100-500	COUNTERFEIT PEN DETECTOR 5PK	3462865291	11/26/2020	210182	7.49
001-100-559	CANON IMAGE FORMULA SCANNER(2)	3462865293	11/26/2020	210183	495.98
001-090-500	2" 3-RING VIEW BINDER (4)	3463539973	12/01/2020	210191	18.36
001-090-500	DESK CALENDAR 11X18 (3)	3463539973	12/01/2020	210191	19.89
001-090-500	DESK CALENDAR 17X22 (2)	3463539973	12/01/2020	210191	9.78
001-090-500	10PK LEGAL STORAGE BOXES	3463539973	12/01/2020	210191	8.59
001-090-500	12PK POP-UP NOTES 3X3	3463539973	12/01/2020	210191	10.95
001-040-500	CITY OF GAUTIER LOGO STAMP	3463614716	12/02/2020	210176	38.05
001-040-500	MONTHLY PLANNERS (4)	3463742767	12/04/2020	210206	32.04
001-040-500	LAMINATE SHEETS 100PK	3463742767	12/04/2020	210206	27.09
001-040-500	RECEIPT BOOKS (2)	3463742767	12/04/2020	210206	15.98
001-040-500	EXPANDABLE ENV 10X13 100CT	3463742767	12/04/2020	210206	86.88
001-040-500	2021 DESK CALENDER 17X22 (2)	3463742767	12/04/2020	210206	9.78
001-040-500	2021 MINI WALL CALENDER (2)	3463742767	12/04/2020	210206	16.50
001-040-500	MINI BINDER CLIPS 144CT	3463742767	12/04/2020	210206	1.62
001-040-500	2021 APP BOOK 8X11	3463742767	12/04/2020	210206	17.74
001-040-500	2021 DESK CALENDER 8X11	3463742767	12/04/2020	210206	7.97
001-040-500	FILE POCKET LEGAL EXP 10PK	3463742767	12/04/2020	210206	25.42
001-021-500	ARROW FLAGS POST-IT	3463742767	12/04/2020	210206	7.99
001-021-500	2021 DESK CALENDER 22X17	3463742767	12/04/2020	210206	4.99
001-021-500	2021 APP BOOK 8X11 (2)	3463742767	12/04/2020	210206	34.72
001-022-500	2021 DESK CALENDER 22X17	3463742768	12/04/2020	210206	12.57
001-090-500	HP 952XL/952 4PK	3463742769	12/04/2020	210212	89.09
001-090-500	HP 64XL TRI-COLOR INK	3463742769	12/04/2020	210212	45.88
001-090-500	HP 64XL BLACK INK	3463742769	12/04/2020	210212	41.88
001-090-500	LEGAL FILE BOXES 4PK (2)	3463742769	12/04/2020	210212	41.70
001-100-500	CS 8.5X11 COPY PAPER (12)	3464028143	12/08/2020	210229	443.04

Fund	Name of Claimant	Trans #	Release Date	Claim Date	Claim Number	Check Number	Claim Amount	Approved/Disapproved
001	CLARION LEDGER/HATTIESBURG AMERICAN	210811	01/05/2021	12/29/2020			209.66	_____

Account Number	Description	Invoice #	Date	P.O.	Amount
001-040-615	BID AD:CONST SIDEWALKS M-BLUFF	0003604018	11/01/2020	210077	209.66

Fund	Name of Claimant	Trans #	Release Date	Claim Date	Claim Number	Check Number	Claim Amount	Approved/Disapproved
001	PAS-POINT GLASS CO INC	210812	01/05/2021	12/29/2020			875.00	_____

Account Number	Description	Invoice #	Date	P.O.	Amount
001-100-720	40"X76"-1 5/16" IMPACT GLASS	10867	12/14/2020	210160	600.00
001-100-720	LABOR-INSTALL	10867	12/14/2020	210160	275.00

Docket of Claims
Release date from 01/05/2021 thru 01/05/2021

Fund	Name of Claimant	Trans #	Release Date	Claim Date	Claim Number	Check Number	Claim Amount	Approved/Disapproved
001	SOLAR CONTROL INC	210813	01/05/2021	12/29/2020			210.00	

Account Number	Description	Invoice #	Date	P.O.	Amount
001-100-720	3M WINDOW FILM INSTL: POL DEPT	210159	12/15/2020	210159	210.00

001	E AND J TIRE LLC	210816	01/05/2021	12/29/2020			1,903.24	

Account Number	Description	Invoice #	Date	P.O.	Amount
001-170-639	235-80-16 TIRE (2): UT TRLR	927	11/30/2020	210231	190.00
001-170-639	205-75-15 WHL,TIRE(2):UT TRLR	927	11/30/2020	210231	160.00
001-170-639	205-75-15 TIRE (2): UT TRLR	927	11/30/2020	210231	240.00
001-170-639	24X12X12 TIRE (2): EXMARK	927	11/30/2020	210231	140.00
001-170-638	245-75-17 HC SET (4):REC VEH	927	11/30/2020	210232	660.00
001-170-638	235-75-16 H-TIRE (4):REC VEH	927	11/30/2020	210232	513.24

001	OCCUPATIONAL HEALTH CENTER INC	210818	01/05/2021	12/29/2020			1,210.00	

Account Number	Description	Invoice #	Date	P.O.	Amount
001-161-604	PRE-EMP DRUG SCREEN:DUBUISSON	222716	12/07/2020	210112	60.00
001-161-604	PRE-EMP PHYSICAL: DUBUISSON	222716	12/07/2020	210112	65.00
001-161-604	PFT: DUBISSON	222716	12/07/2020	210112	45.00
001-161-604	PRE-EMP DRUG SCREEN: WELLS	222716	12/07/2020	210112	60.00
001-161-604	PRE-EMP PHYSICAL: WELLS	222716	12/07/2020	210112	65.00
001-161-604	PFT: WELLS	222716	12/07/2020	210112	45.00
001-161-604	PRE-EMP DRUG SCREEN: SHAW	225154	12/10/2020	210193	70.00
001-161-604	PRE-EMP PHYSICAL: SHAW	225154	12/10/2020	210193	75.00
001-161-604	PFT: SHAW	225154	12/10/2020	210193	45.00
001-161-604	PRE-EMP DRUG SCREEN: LAMBERT	222716	12/07/2020	210184	60.00
001-161-604	PRE-EMP PHYSICAL: LAMBERT	222716	12/07/2020	210184	65.00
001-161-604	PFT: LAMBERT	222716	12/07/2020	210184	45.00
001-161-604	PRE-EMP DRUG SCREEN:WIENIEWITZ	222716	12/07/2020	210184	60.00
001-161-604	PRE-EMP PHYSICAL: WIENIEWITZ	222716	12/07/2020	210184	65.00
001-161-604	PFT: WIENIEWITZ	222716	12/07/2020	210184	45.00
001-161-604	PRE-EMP DRUG SCREEN: NEWBILL	222716	12/07/2020	210184	60.00
001-161-604	PRE-EMP PHYSICAL: NEWBILL	222716	12/07/2020	210184	65.00
001-161-604	PFT: NEWBILL	222716	12/07/2020	210184	45.00
001-161-604	PRE-EMP PHYSICAL: FORD, J	22716	12/07/2020		65.00
001-161-604	PRE-EMP DRUG SCREEN: FORD, J	22716	12/07/2020		60.00
001-161-604	PFT: FORD, J	222716	12/07/2020		45.00

001	ECONOMY BOOTS SALES & SERVICE	210819	01/05/2021	12/29/2020			441.75	

Account Number	Description	Invoice #	Date	P.O.	Amount
001-161-535	KEEN BOOTS: LAMBERT	526288	12/17/2020	210242	150.00
001-161-535	CHIPPEWA BOOTS: WIENIEWITZ	526288	12/17/2020	210242	150.00
001-161-535	CAROLINA BOOTS: NEWBILL	526288	12/17/2020	210242	141.75

001	AUDIOWAVE INC	210820	01/05/2021	12/29/2020			2,816.96	

Account Number	Description	Invoice #	Date	P.O.	Amount
001-100-638	PK113CGR11 CAGE SEATS	A52675	12/09/2020	210046	615.00
001-100-638	LABOR: RMV KENNEL/HEAT ALARM	A52675	12/09/2020	210046	600.00
001-100-638	SUPPLIES: 2016 SLVR CHARGER	A52675	12/09/2020	210046	25.00
001-100-638	SHIPPING	A52675	12/09/2020	210046	165.00
001-100-638	ESTA461HPP SIREN CONTROL	A52809	12/22/2020	210171	465.99

Docket of Claims
Release date from 01/05/2021 thru 01/05/2021

Fund	Name of Claimant	Trans #	Release Date	Claim Date	Claim Number	Check Number	Claim Amount	Approved/Disapproved
001	AUDIOWAVE INC	210820	01/05/2021	12/29/2020			2,816.96	(CONTINUED)

Account Number	Description	Invoice #	Date	P.O.	Amount
001-100-638	ETS100J SPEAKER/BRACKET	A52809	12/22/2020	210171	195.99
001-100-638	EMP BLUE-WHITE 4" LED	A52809	12/22/2020	210171	279.98
001-100-638	LABOR: 2009 F250	A52809	12/22/2020	210171	420.00
001-100-638	SHIPPING	A52809	12/22/2020	210171	25.00
001-100-638	SUPPLIES	A52809	12/22/2020	210171	25.00

Fund	Name of Claimant	Trans #	Release Date	Claim Date	Claim Number	Check Number	Claim Amount	Approved/Disapproved
001	BOZO'S GROCERY & GRILL	210827	01/05/2021	12/29/2020			265.00	_____

Account Number	Description	Invoice #	Date	P.O.	Amount
001-170-513	CHRISTMAS TREE W/ BOWL	11302020	11/30/2020		265.00

Fund	Name of Claimant	Trans #	Release Date	Claim Date	Claim Number	Check Number	Claim Amount	Approved/Disapproved
001	TARGETSOLUTIONS LEARNING LLC	210829	01/05/2021	12/29/2020			2,447.00	_____

Account Number	Description	Invoice #	Date	P.O.	Amount
001-161-681	ALL COURSE CATALOGS	0000034872	03/13/2020		1,140.00
001-161-681	ONLINE TRAINING PLATFORM	0000034872	03/13/2020		912.00
001-161-681	MAINTENANCE FEE	0000034872	03/13/2020		395.00

FUND TOTAL 1 Claims to Checks 56 Total 73,409.12 Manual Held Total 73,409.12

Docket of Claims
Release date from 01/05/2021 thru 01/05/2021

Fund	Name of Claimant	Trans #	Release Date	Claim Date	Claim Number	Check Number	Claim Amount	Approved/Disapproved
020	MS DEVELOPMENT AUTHORITY	210740	01/05/2021	12/22/2020			46,323.96	_____

Account Number	Description	Invoice #	Date	P.O.	Amount
020-201-830	ANNUAL PMT: 12-192-CP-1	GMS: 50758	02/01/2021		46,323.96

FUND TOTAL 20 Claims to Checks 1 Total 46,323.96 Manual Held Total 46,323.96

Docket of Claims
Release date from 01/05/2021 thru 01/05/2021

Fund	Name of Claimant	Trans #	Release Date	Claim Date	Claim Number	Check Number	Claim Amount	Approved/Disapproved
156	GALLS LLC	210793	01/05/2021	12/29/2020			3,390.40	

Account Number	Description	Invoice #	Date	P.O.	Amount
156-100-799	7600 LED TAC FLASHLIGHT (40)	017236426	12/18/2020	210240	3,390.40

Fund	Name of Claimant	Trans #	Release Date	Claim Date	Claim Number	Check Number	Claim Amount	Approved/Disapproved
156	CAN'T MISS EMBROIDERY	210795	01/05/2021	12/29/2020			534.42	

Account Number	Description	Invoice #	Date	P.O.	Amount
156-100-799	EMB CAP FT:COG POL SEAL(50)	25031	12/18/2020	210243	237.50
156-100-799	EMB CAP BK:GAUTIER POLICE(50)	25031	12/18/2020	210243	75.00
156-100-799	CORE SOFT SHELL JACKET (4)	25031	12/18/2020	210243	149.92
156-100-799	EMBROIDER SHIRTS GP BADGE (6)	25031	12/18/2020	210243	72.00

Fund	Name of Claimant	Trans #	Release Date	Claim Date	Claim Number	Check Number	Claim Amount	Approved/Disapproved
156	TEAM ONE COMMUNICATIONS INC	210796	01/05/2021	12/29/2020			376.00	

Account Number	Description	Invoice #	Date	P.O.	Amount
156-100-799	APX TRAVEL CHARGER (4)	9020020431	12/04/2020	210174	376.00

Fund	Name of Claimant	Trans #	Release Date	Claim Date	Claim Number	Check Number	Claim Amount	Approved/Disapproved
156	PRECISION DELTA CORPORATION	210799	01/05/2021	12/29/2020			144.30	

Account Number	Description	Invoice #	Date	P.O.	Amount
156-100-799	9MM 147 GR RANGER 500 RD/CS	18245	12/14/2020	200988	144.30

Fund	Name of Claimant	Trans #	Release Date	Claim Date	Claim Number	Check Number	Claim Amount	Approved/Disapproved
156	OVERWATCH SUPPLY LLC	210815	01/05/2021	12/29/2020			600.00	

Account Number	Description	Invoice #	Date	P.O.	Amount
156-100-799	PROPPER 6 PANEL CAP (50)	1199	12/10/2020	210175	600.00

FUND TOTAL 156 Claims to Checks 5 Total 5,045.12 Manual Held Total 5,045.12

Docket of Claims
Release date from 01/05/2021 thru 01/05/2021

Fund	Name of Claimant	Trans #	Release Date	Claim Date	Claim Number	Check Number	Claim Amount	Approved/Disapproved
171	SOUTHERN PIPE & SUPPLY CO INC	210802	01/05/2021	12/29/2020			867.16	

Account Number	Description	Invoice #	Date	P.O.	Amount
171-176-779	BPITF 3/4 BARB PEX (8)	4822250-00	12/04/2020	210226	25.92
171-176-779	1/2 PEX X8 STUB OUT (8)	4822250-00	12/04/2020	210226	69.28
171-176-779	1 BARB PEX COPPER INSERT (10)	4822250-00	12/04/2020	210226	61.90
171-176-779	3/4 BARB PEX BRS INSERT (25)	4822250-00	12/04/2020	210226	39.00
171-176-779	1 BARB PEX X 1 FIP FEM ADPT	4822250-00	12/04/2020	210226	18.93
171-176-779	3/4 BARB PEX X 3/4 FIP ADPT(3)	4822250-00	12/04/2020	210226	11.97
171-176-779	1/2 CTS TALON TUBE CLAMP (100)	4822250-00	12/04/2020	210226	23.00
171-176-779	3/4 CTS TALON TUBE CLAMP (50)	4822250-00	12/04/2020	210226	28.00
171-176-779	3/4 BARB PEX BRASS 90 (25)	4822250-00	12/04/2020	210226	65.00
171-176-779	1 BARB PEX COPPER INSERT (5)	4822250-00	12/04/2020	210226	23.75
171-176-779	3/4 COPPER INSERT C-RING (100)	4822250-00	12/04/2020	210226	63.00
171-176-779	1" PEX COPPER INSERT CRIMP(25)	4822250-00	12/04/2020	210226	18.75
171-176-779	1/2" COPPER INSERT CRIMP (100)	4822250-00	12/04/2020	210226	28.00
171-176-779	1/2 BARB PEX BRASS INSERT (16)	4822250-00	12/04/2020	210226	13.44
171-176-779	3/4 BARB PEX BRASS INSERT (10)	4822250-00	12/04/2020	210226	13.30
171-176-779	1 BARB PEX COPPER INSERT (5)	4822250-00	12/04/2020	210226	10.15
171-176-779	1/2 BRASS CAP LEAD FREE (2)	4822250-00	12/04/2020	210226	7.44
171-176-779	3/4 PEX LEAD FREE BALL VAL (2)	4822250-00	12/04/2020	210226	10.82
171-176-779	1" PEX BALL VALVE LEAD FREE(2)	4822250-00	12/04/2020	210226	19.32
171-176-779	1 SCH 40 PVC MIPXS M-ADPTR (3)	4822250-00	12/04/2020	210226	3.06
171-176-779	3/4 SCH 40PVC SXMIP M-ADP (5)	4822250-00	12/04/2020	210226	2.70
171-176-779	3/4 NON FLOW GUARD CPVC (5)	4822250-00	12/04/2020	210226	3.25
171-176-779	1 CPVC TEE (3)	4822250-00	12/04/2020	210226	22.77
171-176-779	1 NON FLOWGUARD CPVC M-ADP(4)	4822250-00	12/04/2020	210226	10.60
171-176-779	1 NON FLOWGUARD CPVC 90 (3)	4822250-00	12/04/2020	210226	4.92
171-176-779	1 NON FLOWGUARD CPVC COUPL (5)	4822250-00	12/04/2020	210226	6.95
171-176-779	3X4 PVC FLUSH KIT FLANGE	4822250-00	12/04/2020	210226	5.83
171-176-779	BLUE PEX CTS RED PEX TUBE (40)	4822250-00	12/04/2020	210226	29.20
171-176-779	3/4 X20' CTS BLUE PEX (40)	4822250-00	12/04/2020	210226	48.00
171-176-779	1X20' CTS RED PEX TUBE (40)	4822250-00	12/04/2020	210226	66.40
171-176-779	1" BLUE 20' PEX PIPE (40)	4822250-00	12/04/2020	210226	66.40
171-176-779	GAL GARDNER 0121-GA NF ROOF(2)	4822250-00	12/04/2020	210226	40.08
171-176-779	1SCH 40PVC SXS 90 DEG ELL (3)	4822250-00	12/04/2020	210226	2.97
171-176-779	1SCH 40PVC SXSXS TEE (3)	4822250-00	12/04/2020	210226	3.06

Fund	Name of Claimant	Trans #	Release Date	Claim Date	Claim Number	Check Number	Claim Amount	Approved/Disapproved
171	ADVANCED MARBLE WORKS	210817	01/05/2021	12/29/2020			3,650.00	

Account Number	Description	Invoice #	Date	P.O.	Amount
171-176-779	SHOWER STALLS (2)	210096	12/23/2020	210096	3,050.00
171-176-779	67" CULTURED MARBLE VANITY	210096	12/23/2020	210096	600.00

FUND TOTAL 171 Claims to Checks 2 Total 4,517.16 Manual Held Total 4,517.16

Docket of Claims
Release date from 01/05/2021 thru 01/05/2021

Fund	Name of Claimant	Trans #	Release Date	Claim Date	Claim Number	Check Number	Claim Amount	Approved/Disapproved
176	AT&T	210689	01/05/2021	12/11/2020			202.12	

Account Number	Description	Invoice #	Date	P.O.	Amount
176-170-605	MONTHLY SERVICE	2284972244	11/14/2020		202.12

Fund	Name of Claimant	Trans #	Release Date	Claim Date	Claim Number	Check Number	Claim Amount	Approved/Disapproved
176	AD2 INC	210711	01/05/2021	12/16/2020			501.50	

Account Number	Description	Invoice #	Date	P.O.	Amount
176-170-699	HOSTING FEE DEC 2020	3703	12/15/2020		36.50
176-170-699	SHOPPING CART	3703	12/15/2020		115.00
176-170-699	WEB SITE MAINT: 11/15-12/14	3703	12/15/2020		350.00

Fund	Name of Claimant	Trans #	Release Date	Claim Date	Claim Number	Check Number	Claim Amount	Approved/Disapproved
176	AT&T	210733	01/05/2021	12/22/2020			74.19	

Account Number	Description	Invoice #	Date	P.O.	Amount
176-170-605	DEC 2020: SSP INTERNET	285615432	12/11/2020		74.19

Fund	Name of Claimant	Trans #	Release Date	Claim Date	Claim Number	Check Number	Claim Amount	Approved/Disapproved
176	SPARKLIGHT	210840	01/05/2021	12/29/2020			329.88	

Account Number	Description	Invoice #	Date	P.O.	Amount
176-170-605	INTERNET INSTALL: 132698937	12162020	12/16/2020		50.00
176-170-605	DEC PART MTH: 132698937	12162020	12/16/2020		31.40
176-170-605	JAN 2021: 132698937	12202020	12/16/2020		248.48

FUND TOTAL 176 Claims to Checks 4 Total 1,107.69 Manual Held Total 1,107.69

Docket of Claims
Release date from 01/05/2021 thru 01/05/2021

Fund	Name of Claimant	Trans #	Release Date	Claim Date	Claim Number	Check Number	Claim Amount	Approved/Disapproved
303	MICHAEL BAKER INTERNATIONAL	210741	01/05/2021	12/22/2020			4,716.54	_____

Account Number	Description	Invoice #	Date	P.O.	Amount
303-301-763	CONST PH SERVICES	1103650	12/21/2020		4,716.54

FUND TOTAL 303 Claims to Checks 1 Total 4,716.54 Manual Held Total 4,716.54

Docket of Claims
Release date from 01/05/2021 thru 01/05/2021

Fund	Name of Claimant	Trans #	Release Date	Claim Date	Claim Number	Check Number	Claim Amount	Approved/Disapproved
355	WAGGONER ENGINEERING INC	210742	01/05/2021	12/22/2020			4,855.00	

Account Number	Description	Invoice #	Date	P.O.	Amount
355-723-762	DESIGN: WTR SUPPLY & TRMT	37560	12/08/2020		1,862.50
355-723-763	BIDDING WELL	37560	12/08/2020		840.00
355-723-763	WELL CONST ENG	37560	12/08/2020		2,152.50

FUND TOTAL 355 Claims to Checks 1 Total 4,855.00 Manual Held Total 4,855.00

Docket of Claims
Release date from 01/05/2021 thru 01/05/2021

Fund	Name of Claimant	Trans #	Release Date	Claim Date	Claim Number	Check Number	Claim Amount	Approved/Disapproved
400	AT&T	210694	01/05/2021	12/14/2020			117.99	
	Account Number / Description			Invoice #	Date	P.O.	Amount	
	400-650-605 MONTHLY SERVICE			2284972276	12/06/2020			117.99
400	SOUTHERN LINC	210701	01/05/2021	12/16/2020			89.52	
	Account Number / Description			Invoice #	Date	P.O.	Amount	
	400-650-698 DEC 2020 SERV CHGS			10685753	12/01/2020			80.00
	400-650-698 TAXES/FEES			10685753	12/01/2020			9.52
400	CREDIT CARD CENTER	210702	01/05/2021	12/16/2020			67.41	
	Account Number / Description			Invoice #	Date	P.O.	Amount	
	400-650-535 SS TEES (9): UTILITY BILLING			10282020	10/29/2020			67.41
400	FUELMAN	210717	01/05/2021	12/17/2020			62.80	
	Account Number / Description			Invoice #	Date	P.O.	Amount	
	400-650-525 UNL FUEL			NP59300258	12/14/2020			62.80
400	COG DEPOSITORY ACCOUNT	210737	01/05/2021	12/22/2020			386,460.39	
	Account Number / Description			Invoice #	Date	P.O.	Amount	
	400-000-104 SEP 2020 GARBAGE PMTS			09302020	09/30/2020			126,184.17
	400-000-104 OCT 2020 GARBAGE PMTS			10312020	10/31/2020			129,826.79
	400-000-104 NOV 2020 GARBAGE PMTS			11302020	11/30/2020			130,449.43
400	COG DEPOSITORY ACCOUNT	210743	01/05/2021	12/22/2020			43,427.11	
	Account Number / Description			Invoice #	Date	P.O.	Amount	
	400-680-821 ST LNS #3 90/57 SWR			12092020	12/09/2020			7,877.45
	400-680-822 ST LNS #4 90/57 WTR			12092020	12/09/2020			10,948.67
	400-680-822 ST LNS #4 90/57 SWR			12092020	12/09/2020			9,019.22
	400-680-823 ST LNS #5 ALLEN RD			12092020	12/09/2020			2,149.95
	400-680-824 ST LNS #6 OLD SPAN TR			12092020	12/09/2020			3,765.83
	400-680-825 ST LNS #7 OLD SPAN TR			12092020	12/09/2020			9,665.99
400	ARISTA INFORMATION SYSTEMS INC	210744	01/05/2021	12/22/2020			4,644.40	
	Account Number / Description			Invoice #	Date	P.O.	Amount	
	400-650-698 NOV 2020 STATEMENTS			30955	12/11/2020			1,144.40
	400-650-698 NOV 2020 POSTAGE			1425202012	12/11/2020			3,500.00
400	ISI WATER COMPANY	210746	01/05/2021	12/22/2020			8,550.42	
	Account Number / Description			Invoice #	Date	P.O.	Amount	
	400-650-698 PER CONTRACT: 55% REV INC			1-FINAL	12/01/2020			8,550.42
400	MISSION COMMUNICATIONS LLC	210747	01/05/2021	12/22/2020			1,737.00	
	Account Number / Description			Invoice #	Date	P.O.	Amount	
	400-651-698 RENEWAL: TOWNSEND			1047092	12/07/2020			347.40
	400-651-698 RENEWAL: SKYLINE			1047092	12/07/2020			347.40
	400-651-698 RENEWAL: CALLIE RD			1047092	12/07/2020			347.40
	400-651-698 RENEWAL: GARDEN LANE			1047092	12/07/2020			347.40
	400-651-698 RENEWAL: 17MIS21787			1047092	12/07/2020			347.40

Docket of Claims
Release date from 01/05/2021 thru 01/05/2021

Fund	Name of Claimant	Trans #	Release Date	Claim Date	Claim Number	Check Number	Claim Amount	Approved/Disapproved
400	FUELMAN	210751	01/05/2021	12/22/2020			114.87	
	Account Number / Description			Invoice #	Date	P.O.	Amount	
	400-650-525 UNL FUEL			NP59329215	12/21/2020			114.87
400	SINGING RIVER ELECTRIC COOPERATIVE	210770	01/05/2021	12/28/2020			26.29	
	Account Number / Description			Invoice #	Date	P.O.	Amount	
	400-651-631 CARTER RD WTR TANK 109812001			12152020	12/22/2020			26.29
400	SINGING RIVER ELECTRIC COOPERATIVE	210771	01/05/2021	12/28/2020			2,552.13	
	Account Number / Description			Invoice #	Date	P.O.	Amount	
	400-651-631 LIFT STATIONS 20649			12152020	12/22/2020			1,111.81
	400-651-631 LIFT STATIONS 28779			12152020	12/22/2020			87.61
	400-651-631 SCHOONER WELL 20688			12122020	12/18/2020			962.16
	400-651-631 LIFT STATIONS 20688			12122020	12/18/2020			390.55
400	MSC 7511	210780	01/05/2021	12/28/2020			211.29	
	Account Number / Description			Invoice #	Date	P.O.	Amount	
	400-650-698 GSI100-01 RENTAL FEE			INV3995966	12/16/2020			166.49
	400-650-698 IMC4500 USAGE: B/W			INV3995966	12/16/2020			8.62
	400-650-698 IMC4500 USAGE: COLOR			INV3995966	12/16/2020			36.18
400	SINGING RIVER ELECTRIC COOPERATIVE	210784	01/05/2021	12/28/2020			5,526.00	
	Account Number / Description			Invoice #	Date	P.O.	Amount	
	400-651-631 LIFT STNS 89627001			12152020	12/23/2020			63.56
	400-651-631 LIFT STNS 89702001			12152020	12/23/2020			26.19
	400-651-631 LIFT STNS 17881			12152020	12/23/2020			2,733.96
	400-651-631 WATER WELLS 17881			12152020	12/23/2020			2,702.29
400	FUELMAN	210789	01/05/2021	12/28/2020			70.87	
	Account Number / Description			Invoice #	Date	P.O.	Amount	
	400-650-525 UNL FUEL			NP58425218	12/28/2020			70.87
400	SPARKLIGHT	210790	01/05/2021	12/28/2020			71.41	
	Account Number / Description			Invoice #	Date	P.O.	Amount	
	400-650-698 JAN 2021: #107663106			12162020	12/23/2020			71.41
400	CONSOLIDATED PIPE & SUPPLY	210803	01/05/2021	12/29/2020			1,862.00	
	Account Number / Description			Invoice #	Date	P.O.	Amount	
	400-651-581 1X3/4 MCDONALD CTS COMP T (12)			3703100000	12/04/2020	210109		660.00
	400-651-581 4 FERNCO 1056-44 CPLG (12)			3703100000	12/04/2020	210109		72.00
	400-651-581 1X3/4 MUL P15403-N CPLG (5)			3703100000	12/04/2020	210109		125.00
	400-651-583 6 PVC 3034 SW GREEN 10'(200)			3703100000	12/04/2020	210109		660.00
	400-651-583 6 3034 SW SWR 45 EL (12)			3703100000	12/04/2020	210109		135.00
	400-651-583 6 3034 SW SWR 45 ST EL (12)			3703100000	12/04/2020	210109		180.00
	400-651-583 M550248106 HOSE CLAMP (6)			3703100000	12/04/2020	210109		30.00
400	C & M ELECTRIC MOTOR SERVICE INC	210804	01/05/2021	12/29/2020			1,789.60	
	Account Number / Description			Invoice #	Date	P.O.	Amount	
	400-651-584 5HP SUB PUMP: BROOKSIDE LS			12307	12/07/2020	210234		1,789.60

Docket of Claims
Release date from 01/05/2021 thru 01/05/2021

Fund	Name of Claimant	Trans #	Release Date	Claim Date	Claim Number	Check Number	Claim Amount	Approved/Disapproved
400	SECURE NETWORKS LLC	210807	01/05/2021	12/29/2020			265.00	

Account Number	Description	Invoice #	Date	P.O.	Amount
400-650-559	LEXMARK LASER PRINTER	4383	12/11/2020	210185	265.00

Fund	Name of Claimant	Trans #	Release Date	Claim Date	Claim Number	Check Number	Claim Amount	Approved/Disapproved
400	STAPLES BUSINESS ADVANTAGE DEPT ATL	210809	01/05/2021	12/29/2020			213.92	

Account Number	Description	Invoice #	Date	P.O.	Amount
400-650-500	PAPER CLIPS 1000CT	3461909372	11/14/2020	210155	.56
400-650-500	BLUE PENS 24PK	3461909372	11/14/2020	210155	10.40
400-650-500	EPSON T252 HY CYAN INK	3461909372	11/14/2020	210155	28.49
400-650-500	EPSON T252 HY BLACK INK	3461909372	11/14/2020	210155	34.48
400-650-500	24" VIEWSONIC LED MONITOR	3463539974	12/01/2020	210155	139.99

Fund	Name of Claimant	Trans #	Release Date	Claim Date	Claim Number	Check Number	Claim Amount	Approved/Disapproved
400	CITY ELECTRIC SUPPLY CO	210810	01/05/2021	12/29/2020			448.00	

Account Number	Description	Invoice #	Date	P.O.	Amount
400-651-583	12 VDC 5AHR BATT (13): SCADA	PAS/069429	11/13/2020	210147	291.20
400-651-583	12 VDC 5AHR BATT (4): SCADA	PAS/069731	11/25/2020	210147	89.60
400-651-581	12 VDC 5AHR BATT (3): SCADA	PAS/069731	11/25/2020		67.20

Fund	Name of Claimant	Trans #	Release Date	Claim Date	Claim Number	Check Number	Claim Amount	Approved/Disapproved
400	MUSCO-GULFPORT 1227	210814	01/05/2021	12/29/2020			2,730.00	

Account Number	Description	Invoice #	Date	P.O.	Amount
400-651-709	5/8X3/4 COMP METER MINODE (14)	0689903	12/17/2020	210246	2,730.00

Fund	Name of Claimant	Trans #	Release Date	Claim Date	Claim Number	Check Number	Claim Amount	Approved/Disapproved
400	AT&T	210826	01/05/2021	12/29/2020			294.96	

Account Number	Description	Invoice #	Date	P.O.	Amount
400-650-605	MONTHLY SERVICE	2284975234	12/14/2020		294.96

FUND TOTAL 400 Claims to Checks 23 Total 461,333.38 Manual Held Total 461,333.38

Docket of Claims
Release date from 01/05/2021 thru 01/05/2021

Fund	Name of Claimant	Trans #	Release Date	Claim Date	Claim Number	Check Number	Claim Amount	Approved/Disapproved
404	THOMPSON CONSULTING SERVICES LLC	210738	01/05/2021	12/22/2020			30,614.39	_____

Account Number	Description	Invoice #	Date	P.O.	Amount
404-324-694	DEBRIS MONITORING: H ZETA	20480011	12/14/2020		30,614.39

FUND TOTAL 404 Claims to Checks 1 Total 30,614.39 Manual Held Total 30,614.39

Docket of Claims
Release date from 01/05/2021 thru 01/05/2021

SUMMARY OF ALL FUNDS

FUND 1	Claims	to	Checks	56	Total	73,409.12	Manual	Held	Total	73,409.12
FUND 20	Claims	to	Checks	1	Total	46,323.96	Manual	Held	Total	46,323.96
FUND 156	Claims	to	Checks	5	Total	5,045.12	Manual	Held	Total	5,045.12
FUND 171	Claims	to	Checks	2	Total	4,517.16	Manual	Held	Total	4,517.16
FUND 176	Claims	to	Checks	4	Total	1,107.69	Manual	Held	Total	1,107.69
FUND 303	Claims	to	Checks	1	Total	4,716.54	Manual	Held	Total	4,716.54
FUND 355	Claims	to	Checks	1	Total	4,855.00	Manual	Held	Total	4,855.00
FUND 400	Claims	to	Checks	23	Total	461,333.38	Manual	Held	Total	461,333.38
FUND 404	Claims	to	Checks	1	Total	30,614.39	Manual	Held	Total	30,614.39
	Total for all Funds		Checks	94	Total	631,922.36	Manual	Held	Total	631,922.36

CITY OF GAUTIER
Consent Agenda Item #1
Fact Sheet

Council Meeting:	**January 5, 2021**
Title:	**Authorization for Seymour Engineering, Sarah McLellan, to act as Joint Application Agent for the Rue Gentilly drainage project.**
Introduced by:	
Contact Person/Telephone	**Paula Yancey 497-8000**

Summary Explanation: Authorization for Seymour Engineering, Sarah McLellan, to act as Joint Application Agent for the Rue Gentilly drainage project.

EXHIBITS FOR REVIEW

Resolution	☐
Ordinance	☐
Contract/Agreement	☐
Minutes	☐
Plan Maps	☐
Order	☒
Other	☐
Submittal Authorization	**City Manager**

Staff Recommendation:
Approval

Motion Made by:													
Torjusen	☐	**Martin**	☐	**George**	☐	**Jackson**	☐	**Vaughan**	☐	**Anderson**	☐	**Colledge**	☐

Second Made by:													
Torjusen	☐	**Martin**	☐	**George**	☐	**Jackson**	☐	**Vaughan**	☐	**Anderson**	☐	**Colledge**	☐

Voted as follows:		**Ayes**	**Nays**	**Abstained**	**Absent**
Mayor	**Torjusen**	☐	☐	☐	☐
At Large	**Martin**	☐	☐	☐	☐
Ward 1	**George**	☐	☐	☐	☐
Ward 2	**Jackson**	☐	☐	☐	☐
Ward 3	**Vaughan**	☐	☐	☐	☐
Ward 4	**Anderson**	☐	☐	☐	☐
Ward 5	**Colledge**	☐	☐	☐	☐

Action Taken:

There came for consideration of the Mayor and Members of the Council of the City of Gautier, Mississippi, the following:

ORDER NUMBER 000-2021

WHEREAS, the City has retained Seymour Engineering to provide engineering and other professional services in relation to the Rue Gentilly drainage project; and

WHEREAS, this project requires Department of Marine Resources approval and permitting; and

WHEREAS, the Department of Marine Resources requires the City to execute a Joint Application Agent form in order to allow Seymour Engineering, Sarah McLellan, to move forward with the permitting process that is necessary to complete this project;

IT IS HEREBY ORDERED by the Mayor and Members of the Council of the City of Gautier, Mississippi, that Seymour Engineering, Sarah McLellan, is hereby authorized to act as Joint Application Agent on behalf of the City related to the Mississippi Department of Marine Resources permitting process for the Rue Gentilly drainage project.

IT IS FURTHER ORDERED that the City Manager or City Clerk is authorized to execute any and all documents necessary for this purpose.

Motion was made by **BLANK**, seconded by **BLANK,** and the following vote was recorded:

AYES:

NAYS:

_____
MAYOR

ATTEST:

_____
CITY CLERK

BLANK by Mayor and Members of the Council of the City of Gautier, Mississippi, at the meeting of January 5, 2021.

MISSISSIPPI DEPARTMENT OF MARINE RESOURCES

Agent Authorization

I authorize the person(s) and/or company listed below to act as my agent regarding the proposed project as described in the Joint Application and Notification at the location listed below:

Seymour Engineering, Sarah McLellan
(name of agent)

925 Tommy Munro Dr., Suite G
(address)

Biloxi, MS 39532
(city, state, zip code)

228-385-2350
(agent phone number)

City of Gautier
(location of project)

Rue Gentilley

Jackson County, MS

Paula Yancey, City Manager
(print applicant name)

_____ (applicant signature)

_____ (date)

Do you want the permit mailed to the agent? ✓ Yes _____ No

CITY OF GAUTIER
Consent Agenda Item #2
Fact Sheet

Council Meeting: January 5, 2021
Title: Resolution approving the continuation of a Declaration of Local Emergency pertaining to COVID-19.

Introduced by:
Contact Person/Telephone Teresa Montgomery 497-8000

Summary Explanation: Resolution approving the continuation of a Declaration of Local Emergency pertaining to COVID-19 until further notice.

EXHIBITS FOR REVIEW

Resolution	☒
Ordinance	☐
Contract	☐
Minutes	☐
Plan Maps	☐
Order	☐
Other	☐
Submittal Authorization	City Manager

Staff Recommendation:
Approval

Motion Made by:													
Torjusen	☐	Martin	☐	George	☐	Jackson	☐	Vaughan	☐	Anderson	☐	Colledge	☐

Second Made by:													
Torjusen	☐	Martin	☐	George	☐	Jackson	☐	Vaughan	☐	Anderson	☐	Colledge	☐

Voted as follows:		Ayes	Nays	Abstained	Absent
Mayor	Torjusen	☐	☐	☐	☐
At Large	Martin	☐	☐	☐	☐
Ward 1	George	☐	☐	☐	☐
Ward 2	Jackson	☐	☐	☐	☐
Ward 3	Vaughan	☐	☐	☐	☐
Ward 4	Anderson	☐	☐	☐	☐
Ward 5	Colledge	☐	☐	☐	☐

Action Taken:

There came on for consideration of the Mayor and Members of the Council of the City of Gautier, Mississippi, the following:

RESOLUTION NUMBER 000-2021

WHEREAS, on March 16, 2020, Mayor of Gautier, Phil Torjusen issued a proclamation of a local emergency due to conditions of extreme peril to the safety of persons and property which have arisen within said City of Gautier, Mississippi due to the COVID-19 outbreak; and

WHEREAS, on March 17, 2020, the City Council of Gautier ratified the proclamation of local emergency and continued the existence of same; and

WHEREAS, the City Council finds that it is necessary and in the best interest of the public welfare and safety to continue the state of local emergency as indicated in that resolution.

NOW, THEREFORE, BE IT RESOLVED that a local emergency does continue to exist throughout said City of Gautier, Mississippi, as indicated; and

IT IS FURTHER PROCLAIMED AND RESOLVED that said local emergency shall be deemed to continue to exist until further notice.

IT IS FURTHER PROCLAIMED AND RESOLVED that the City Manager or City Clerk is hereby authorized to execute any and all documents necessary for this purpose.

Motion was made by **BLANK,** seconded by **BLANK,** and the following vote was recorded:

AYES:

NAYS:

_____
MAYOR

ATTEST:

_____
CITY CLERK

BLANK by Mayor and Members of the Council of the City of Gautier, Mississippi, at the meeting of January 5, 2021.

CITY OF GAUTIER
Consent Agenda Item #3
Fact Sheet

Council Meeting: January 5, 2021
Title: Approval of Minutes from Recessed Council Meeting held December 15, 2020.

Introduced by:

Contact Person/Telephone Teresa Montgomery 497-8000

Summary Explanation: Approval of Minutes from Recessed Council Meeting held December 15, 2020.

EXHIBITS FOR REVIEW

Resolution	☐
Ordinance	☐
Contract/Agreement	☐
Minutes	☒
Plan Maps	☐
Order	☒
Other	☐
Submittal Authorization	City Manager

Staff Recommendation:
Approval

Motion Made by:													
Torjusen	☐	Martin	☐	George	☐	Jackson	☐	Vaughan	☐	Anderson	☐	Colledge	☐

Second Made by:													
Torjusen	☐	Martin	☐	George	☐	Jackson	☐	Vaughan	☐	Anderson	☐	Colledge	☐

Voted as follows:		Ayes	Nays	Abstained	Absent
Mayor	Torjusen	☐	☐	☐	☐
At Large	Martin	☐	☐	☐	☐
Ward 1	George	☐	☐	☐	☐
Ward 2	Jackson	☐	☐	☐	☐
Ward 3	Vaughan	☐	☐	☐	☐
Ward 4	Anderson	☐	☐	☐	☐
Ward 5	Colledge	☐	☐	☐	☐

Action Taken:

There came for consideration of the Mayor and Members of the Council of the City of Gautier, Mississippi, the following:

ORDER NUMBER 000-2021

WHEREAS, Miss. Code Ann. 21-15-33 requires that the minutes be adopted and approved by a majority of the members of the governing body at the next regular meeting or within thirty (30) days of the meeting they represent, whichever occurs first. Upon such approval, the minutes are valid from and after the date of the meeting; and

IT IS HEREBY ORDERED by the Mayor and Members of the Council of the City of Gautier, Mississippi, that the minutes from the Recessed Council Meeting held December 15, 2020 are hereby approved.

IT IS FURTHER ORDERED that the City Manager or City Clerk is authorized to execute any and all documents necessary for this purpose.

Motion was made by **BLANK**, seconded by **BLANK,** and the following vote was recorded:

AYES:

NAYS:

_____
MAYOR

ATTEST:

_____
CITY CLERK

BLANK by Mayor and Members of the Council of the City of Gautier, Mississippi, at the meeting of January 5, 2021.

Tuesday
December 15, 2020
Gautier, Mississippi

BE IT REMEMBERED THAT A RECESSED MEETING of the Mayor and Members of the Council of the City of Gautier, Mississippi was held December 15, 2020 at 6:30 PM in the City Hall Municipal Building, 3330 Highway 90, Gautier Mississippi.

Those present were Mayor Phil Torjusen, Council Members Mary Martin, Cameron George, Richard Jackson, Casey Vaughan, Rusty Anderson, and Adam Colledge. Also present were Teresa Montgomery, City Clerk; Paula Yancey, City Manager; Josh Danos, City Attorney and other concerned citizens.

AGENDA
CITY OF GAUTIER, MISSISSIPPI
CITY HALL COUNCIL CHAMBERS
December 15, 2020 @ 6:30 PM

I. Call to Order

1. **Prayer**
2. **Pledge of Allegiance**

II. Agenda Order Approval

III. Announcements

1. **Offices will be closed Thursday, December 24th and Friday, December 25th in observance of the Christmas Holiday.**
2. **Offices will be closed Thursday, December 31st and Friday, January 1st in observance of the New Year's Holiday.**

IV. Presentation Agenda

1. **Jay Estes of Allen Engineering to present information on the City's MS4 Permit. (Stormwater Management Plan)**

V. Business Agenda

1. **Authorization to approve and execute the contract between CenterPoint Energy Mississippi Gas and the City of Gautier, Mississippi**

	STAFF PRESENTATION		PUBLIC QUESTIONS/COMMENTS (3 MINUTES PER PERSON)		MOTION COUNCIL DISCUSSION/QUESTIONS		VOTE

2. **Authorization to approve the proposal by Colony Insurance Company for property coverage on the water ionization plant and the eight (8) municipal wells through HUB International.**

	STAFF PRESENTATION		PUBLIC QUESTIONS/COMMENTS (3 MINUTES PER PERSON)		MOTION COUNCIL DISCUSSION/QUESTIONS		VOTE

3. **Authorization to Award Contract to DNA Underground, LLC. for the Old Spanish Trail/Gautier Vancleave Road Sewer Improvements Project (RESTORE), contingent upon MDEQ approval**

	STAFF PRESENTATION		PUBLIC QUESTIONS/COMMENTS (3 MINUTES PER PERSON)		MOTION COUNCIL DISCUSSION/QUESTIONS		VOTE

4. **Waiver of Bid Irregularity for Moran Hauling's bid on the Martin Bluff Road Sidewalk Improvements Project**

	STAFF PRESENTATION		PUBLIC QUESTIONS/COMMENTS (3 MINUTES PER PERSON)		MOTION COUNCIL DISCUSSION/QUESTIONS		VOTE

5. **Authorization to Acknowledge Bids and Award Contract for the Martin Bluff Road Sidewalk Improvements Project to Moran Hauling**

	STAFF PRESENTATION		PUBLIC QUESTIONS/COMMENTS (3 MINUTES PER PERSON)		MOTION COUNCIL DISCUSSION/QUESTIONS		VOTE

6. **Consideration of a request for a four-feet (4') variance to side yard set-back requirements for an accessory building in an R-1 Low Density Single-Family Residential Zoning District at 1706 Beth Circle, Gautier, MS. (GPC #20-23-VAR)**

	STAFF PRESENTATION		PUBLIC QUESTIONS/COMMENTS (3 MINUTES PER PERSON)		MOTION COUNCIL DISCUSSION/QUESTIONS		VOTE

7. **Consideration of a request for a twenty-two (22') variance to front yard set-back requirements for an accessory structure in an R-1 Low Density Single-Family Residential Zoning District at 2404 Oxford Drive, Gautier, MS. (GPC #20-24-VAR)**

	STAFF PRESENTATION		PUBLIC QUESTIONS/COMMENTS (3 MINUTES PER PERSON)		MOTION COUNCIL DISCUSSION/QUESTIONS		VOTE

8. **Approval of the Docket of Claims**

	STAFF PRESENTATION		PUBLIC QUESTIONS/COMMENTS (3 MINUTES PER PERSON)		MOTION COUNCIL DISCUSSION/QUESTIONS		VOTE

VI. Consent Agenda (All items approved in one motion)

1. **Authorization to accept a monetary donation from Gautier Pride, Inc. for the City of Gautier's Lights and Lagniappe on the Bayou**

2. **Resolution approving the continuation of a Declaration of Local Emergency pertaining to COVID-19.**

3. **Approval of Minutes from Recessed Council Meeting held November 17, 2020 and Regular Council Meeting held December 1, 2020.**

4. **Approval to renew a Rental Agreement with Pitney Bows, Inc. for a mailing machine**

5. **Acceptance of a Certificate of Attendance from the Mississippi Municipal Court Clerk Conference for Michael Steward, Gautier Municipal Court Clerk**

6. **Receive September 2020 Finance Report**

VII. STUDY AGENDA

1. **Discuss Citizen Comments**

2. **Discuss Council Comments**

3. **Discuss City Manager Comments**

4. **Discuss City Clerk Comments**

5. **Discuss City Attorney Comments**

Adjourn until January 5, 2021 at 6:30 pm
www.gautier-ms.gov

Meeting was called to order by Mayor Torjusen at 6:30pm.

Councilman Vaughan made the motion to approve the agenda order, as presented. Councilwoman Martin seconded the motion. The vote was carried unanimously.

Announcements

1. Offices will be closed Thursday, December 24th and Friday, December 25th in observance of the Christmas Holiday.

2. Offices will be closed Thursday, December 31st and Friday, January 1st in observance of the New Year's Holiday.

Presentation

1. Jay Estes of Allen Engineering to present information on the City's MS4 Permit. (Stormwater Management Plan)

STATE OF MISSISSIPPI

Office of the Governor

PROCLAMATION

WHEREAS, pursuant to Miss. Code Ann. Section 3-3-7, Thanksgiving Day, Christmas Day and New Year's Day are declared legal holidays in the State of Mississippi; and

WHEREAS, during the Thanksgiving holiday and Christmas and New Year's season, many state employees will spend time with their families in Mississippi and in other states:

NOW, THEREFORE, I, Tate Reeves, Governor of the State of Mississippi, pursuant to the authority vested in me under the Constitution of the State of Mississippi and applicable statutes of the State of Mississippi, do hereby authorize the closing of all offices of the State of Mississippi on Thursday, November 26, 2020, in observance of THANKSGIVING DAY; on Friday, December 25, 2020, in observance of CHRISTMAS DAY; and on Friday, January 1, 2021, in observance of NEW YEAR'S DAY.

IN ADDITION, I hereby authorize the executive officers of all state agencies, in their discretion after considering the interests of the people of the State of Mississippi and the staffing needs of their respective agencies, to close all offices of the State of Mississippi on Friday, November 27, 2020, in further observance of the Thanksgiving holiday, on Thursday, December 24, 2020, in further observance of Christmas and on Thursday, December 31, 2020, in further observance of New Year's Day; and to staff their respective agencies as needed during the Thanksgiving holiday and Christmas and New Year's season.

IN WITNESS WHEREOF, I have hereunto set my hand and caused the Great Seal of the State of Mississippi to be affixed.

DONE in the City of Jackson, on the 16th day of October in the year of our Lord, two thousand and twenty, and of the Independence of the United States of America, the two hundred and forty-fifth.

Tate Reeves

TATE REEVES
GOVERNOR

BY THE GOVERNOR

Michael Watson

MICHAEL WATSON
SECRETARY OF STATE

Councilman Vaughan made the motion to approve and execute the contract between CenterPoint Energy Mississippi Gas and the City of Gautier, as presented. Councilwoman Martin seconded the motion. The vote was carried unanimously.

There came for consideration of the Mayor and Members of the Council of the City of Gautier, Mississippi, the following:

ORDER NUMBER 494-2020

WHEREAS, on or about October 2, 2018, the City of Gautier entered into an Engagement Agreement with Local Government Services, LLC. to assist with negotiating a new Gas Franchise Agreement between the City and CenterPoint Energy, Inc.; and

WHEREAS, CenterPoint Energy has agreed to accept the latest agreement proposed by Local Government Services; and

WHEREAS, this agreement includes a ten (10) year term, along with the City's right to bond for each permit granted; and

WHEREAS, CenterPoint will annually pay the City 3.7% of the gross receipts from the sales of natural gas to residential and commercial customers within the City limits; and

WHEREAS, the Mayor and Council Members hereby find that entering into this contract is in the best interests of the City of Gautier;

IT IS HEREBY ORDERED by the Mayor and Members of the Council of the City of Gautier, Mississippi, that the attached contract with CenterPoint Energy is hereby approved and authorized.

IT IS FURTHER ORDERED that the City Manager or City Clerk is authorized to execute any and all documents necessary for this purpose.

Motion was made by **Councilman Vaughan,** seconded by **Councilwoman Martin,** and the following vote was recorded:

AYES: **Phil Torjusen**
Mary Martin
Cameron George
Richard Jackson
Casey Vaughan
Rusty Anderson
Adam Colledge

NAYS: **None**

_____
MAYOR

ATTEST:

_____
CITY CLERK

Passed and Adopted by Mayor and Members of the Council of the City of Gautier, Mississippi, at the meeting of December 15, 2020.

CITY OF GAUTIER
MEMORANDUM

To: City Council
From: Paula Yancey, City Manager
Date: December 2, 2020
Subject: Authorization to approve and execute the contract between CenterPoint Energy Mississippi Gas and the City of Gautier

---

REQUEST:
The City Manager is requesting authorization to approve and execute the contract between CenterPoint Energy Mississippi Gas and the City of Gautier.

BACKGROUND:
In October, 2018, the City of Gautier entered into an Engagement Agreement with Local Government Services, LLC. to assist with negotiating a new Gas Franchise Agreement between the City and CenterPoint Energy, Inc. CenterPoint Energy has agreed to accept our proposed franchise agreement.

DICUSSION:
The franchise agreement includes a 10-year term, as requested, along with the City's right to require a bond for each permit granted that could be used in case CenterPoint does not return the Right-of-Way back to its original state once work has been completed. CenterPoint will annually pay the City 3.7% of the gross receipts from the sales of natural gas to residential and commercial customers within the City limits

RECOMMENDATION:
The City Manager recommends that City Council approve and execute the contract between CenterPoint Energy Mississippi Gas and the City of Gautier

City Council May:

1. Approve the contract between CenterPoint Energy Mississippi Gas and the City of Gautier; or

2. Not approve the contract between CenterPoint Energy Mississippi Gas and the City of Gautier.

ATTACHMENT(S):
Contract and Agreement between CenterPoint Energy Mississippi Gas and the City of Gautier

CONTRACT AND AGREEMENT BY AND BETWEEN CENTERPOINT ENERGY RESOURCES CORP. D/B/A CENTERPOINT ENERGY MISSISSIPPI GAS AND THE CITY OF GAUTIER, MISSISSIPPI

This Contract and Agreement (the "Contract") made and entered into this the 15th day of December, 2020, by and between CenterPoint Energy Resources Corp. d/b/a CenterPoint Energy Mississippi Gas, its successors and assigns (sometimes hereinafter called the "Company"), and the City of Gautier, Mississippi (sometimes hereinafter called the "City").

Section 1. In consideration of the benefits to accrue to the City and the inhabitants thereof from natural gas services, and in consideration of the revenues hereinafter set forth that the City will receive, the Company is hereby given, granted and vested with the rights, authorities, privileges, permits, and licenses to establish, lay, construct, reconstruct, own, maintain, erect, install, inspect, renew, replace, repair, change the size of, use, remove, abandon in place, operate, extend and enlarge a plant or system for the manufacture, generation, transmission, transportation, distribution and/or sale of gas to the City and its inhabitants and for all purposes whatsoever in, under, upon, over, across and along all of the present and future streets, avenues, parkways, squares, thoroughfares, roads, highways, sidewalks, alleys, ways, bridges, viaducts, underpasses, and public places in the City, and areas hereafter annexed to or acquired by and placed within the corporate boundaries of the City, for any and all of the purposes referred to in the Contract. Said plant or system shall consist of mains, pipelines, meters, regulators, feeders, valves, compressors, anti-corrosion items, conduits for the transmission of communication signals related to the aforementioned uses, appliances, facilities, structures, machines, connections, attachments, fencing, markers, wires, cables, appurtenances and fixtures and other equipment, above or below ground, as may be necessary or convenient for the aforementioned purposes (the "System").

Section 2. The Company agrees, in consideration of the agreements set forth above, to pay to the City a sum of money equal to 3.7% of the gross receipts of the Company, from the sales of natural gas to residential and commercial customers within the limits of the City, as the same may now or hereafter lawfully exist, payable annually on or before February 10th of each year for the amount due on account of such sales during the preceding calendar year, or part thereof in which this Contract is in effect; provided, however, if any valid present or future law or ordinance requires any payment by the Company to the City for, or in connection with the exercise by the Company of, any of its rights under the Contract, then the 3.7% payment hereinabove provided for shall be reduced by the amount of any payments so required by statute or ordinance, but in no event shall the City be paid less than a sum of money equal to 3.7% of the gross receipts of the Company from the sale of gas to residential and commercial customers situated within the limits of the City. The payments hereinabove provided for shall be binding on the Company, or any successors or assigns of the Company. Payment must be received by the City on the due date or CenterPoint shall pay City an additional charge of one percent (1%) per month, for each month the total amount due to the City is not received by the City by the due date. All amounts paid shall be subject to audit by City no more than once each calendar year upon at least ten (10) business days prior written notice to the Company provided, however, that such audit shall take place within three (3) years from the date the City receives such payment, after which period any such payment shall be considered final. If any audit reveals an underpayment by the Company of five percent (5%) or more during any audit period, the Company shall be responsible for City's reasonable out of pocket costs associated with the audit. Any underpayments shall be paid to City within ten (10) business days after notification to the Company.

Section 3. The City will not vacate any public right-of-way containing any Company facilities without first advising the Company of its intention to vacate the right-of-way and cooperating with the Company in reasonable attempts to obtain the necessary property rights to maintain its facilities in the right-of-way. Subject to applicable law, if the City undertakes any public improvement project that is required in the interest of public health, safety, welfare, necessity or convenience, the Company shall make such changes as required at the Company's sole cost, expense and risk. Subject to normal operating conditions that are within the Company's control, the Company shall complete relocation of its facilities so as to accommodate the improvement project at least ten (10) calendar days prior to commencement of the improvement project or such other time to which the parties may agree in writing.

Section 4. The Company shall at all times during the term of this Contract be subject to all lawful exercise of the police powers of the City in respect to the City's public rights-of-way, including, but not limited to, all lawful ordinances or regulations of general applicability that regulate the access and the use of the City's rights-of-way, except as provided for in this Contract and/or the applicable laws of the State of Mississippi and the orders, rules and regulations of the Mississippi Public Service Commission.

Section 5. Prior to commencing any construction, maintenance, repair, removal, abandonment or relocation work in the City right-of-way, the Company shall secure any necessary permit from the City before proceeding with any such work. Any permit fee paid by the Company shall be deducted from the 3.7% yearly sum referenced above. Notwithstanding the foregoing, City understands and acknowledges there may be instances when the Company is required to make emergency repairs. The Company will notify City prior to such emergency repairs, if practicable, and will obtain the necessary permits in a reasonable time after

notification to City. Failure to obtain permits or comply with permit requirements shall subject the Company to a potential work stoppage until all reasonably necessary permits are obtained. The City may require such information, plans and/or specifications related to the work described in the applicable permit and an indemnity bond or other acceptable security in an amount to be set by the City to pay any damages to any part of the City road system or other City property or to any city employee or member of the public caused by activity or work of the Company performed under authority of the permit issued as are reasonable to protect the public, health and safety during the activities described in the applicable permit.

Section 6. The System shall be so laid, set or constructed as not to unreasonably interfere with the proper use of the streets, avenues, parkways, squares, thoroughfares, roads, highways, sidewalks, alleys, ways, bridges, viaducts, underpasses, and public places in the City, and shall be maintained in reasonably good condition and repair, and to that end the Company shall abide by all lawful and reasonable ordinances and resolutions that have been or may be duly adopted by the governing body of the City. In the event of any conflict between this Contract and any City ordinance or regulation which addresses usage of the rights-of-way, the terms of this Contract shall govern.

Section 7. Whenever the Company shall cause any opening or alteration to be made in any of the streets, avenues, parkways, squares, thoroughfares, roads, highways, sidewalks, alleys, ways, bridges, viaducts, underpasses, streams or public places of the City for the purpose as set out above, the Company shall, within a reasonable length of time, restore such property, at the Company's expense, to a condition as good as that prevailing prior to the Company's work, if reasonably practicable to do the same. If the Company shall fail to promptly perform the restoration required herein, after written request of the City and a reasonable opportunity to

satisfy that request, the City shall have the right to put the rights-of-way back into condition as good as that prevailing prior to Company work, if reasonably practicable to do the same. In the event the City determines that the Company is responsible for such disturbance or damage, the Company shall be obligated to fully reimburse the City for such reasonable restoration costs. The Company and the City shall continuously be members of Mississippi 811 or an approved equivalent, and shall comply with all applicable rules and regulations. The Company shall keep up-to-date maps and records showing the location and sizes of all mains, lines and service connections laid by it on the City's property and shall make such maps available to the City at a mutually agreed upon location, for viewing, however, for confidential and proprietary reasons, the Company shall not be required to provide copies of its maps and plats to the City.

Section 8. The Company shall maintain in full force and effect during the Term of this Agreement, comprehensive general liability insurance in the amount of Five Million Dollars ($5,000,000) combined single limit for bodily injury, and property damages. The Company shall provide the City with a certificate of insurance designating it as an additional insured. Such insurance shall be non-cancelable except upon thirty (30) days prior written notice to the City.

Section 9. The Company shall hold the City harmless from any and all liability or damages resulting from the negligence of the Company in the construction and maintenance of the System in the above-described locations. The Company shall indemnify, defend and hold the City, its officers, boards, commissions, agents and employees (collectively the "Indemnified Parties") harmless from and against any and all lawsuits, claims, causes of action, actions, liabilities, demands, damages, judgments, settlements, losses and expenses (including attorney's fees and disbursements of counsel) that any of the Indemnified Parties may sustain or incur arising out of the negligence of the Company, its subcontractors, employees and agents in the

construction and maintenance of the System on the City's property. The Company shall not be required to indemnify, defend or hold harmless the Indemnified Parties attributable to the negligence or misconduct of the Indemnified Parties or any unaffiliated third parties.

Section 10. The Company shall have the power and authority, subject to the supervision of the Mississippi Public Service Commission or other duly constituted governmental authority vested with the power now vested in the Mississippi Public Service Commission to supervise and regulate public utilities in the State of Mississippi, to make, adopt and enforce rates, rules and regulations for the furnishing of natural gas and for the reasonable operation of the System and shall have the right at all reasonable hours to have access to the System for the purpose of making repairs and other proper purposes.

Section 11. The term of this Contract shall be for a period of ten (10) years from the date of its adoption by the Mayor and the City Council. The term shall automatically renew for one-year periods, unless either party gives notice of termination at least ninety (90) days prior to the expiration of the then-current term. Title to the System shall remain in the Company while the Contract or other source of authority for the System's location remains in effect, and the Company shall have full rights to abandon in place or remove the System within a reasonable time after the Contract or other source of authority ends.

Section 12. Neither acceptance of, nor compliance with, the provisions of this Contract shall in any way impair or affect, or constitute or be construed as a relinquishment or waiver of, any right, permission or authority which the Company may have independently of this Contract; nor shall any use by the Company of public property or places in the City, as authorized by this Contract or service rendered by the Company in the City, be treated as use solely of the rights, permission and authority provided for by this Contract or as service referable

solely to this Contract or to any obligation of service consequent upon acceptance thereof or as in any way indicating non-use of, non-compliance with, any obligation incident to, any right, permission or authority vested in the Company, independently of this Contract

Section 13. This Contract may be executed in one or more counterparts, all of which shall be considered one and the same Contract. Each part of this Contract is severable. If any term or provision hereof is illegal or invalid for any reason, such illegality or invalidity shall not affect the legality or validity of the remainder of this Contract.

IN WITNESS WHEREOF, each of the parties hereto has caused this Contract to be executed on its behalf, all as of the day and year first above written.

ATTEST:

CENTERPOINT ENERGY RESOURCES CORP. d/b/a CENTERPOINT ENERGY MISSISSIPPI GAS

_____
Secretary

BY: _____
Christe Singleton, Vice President

ATTEST:

CITY OF GAUTIER, MISSISSIPPI

_____
City Clerk

_____
Mayor

Councilman Vaughan made the motion to approve the proposal by Colony Insurance Company to purchase optional property coverage, as presented, to insure the water treatment plant and eight (8) municipal wells through HUB International. Councilwoman Martin seconded the motion. The vote was carried unanimously.

There came for consideration of the Mayor and Members of the Council of the City of Gautier, Mississippi, the following:

ORDER NUMBER 495-2020

WHEREAS, HUB International currently serves as the City's "Broker of Record" in regards to Property and Casualty Insurance; and

WHEREAS, HUB International has negotiated optional property coverage for utility infrastructure with numerous insurance providers and presented the best rate and coverage options to the City Manager for approval; and

WHEREAS, the City has determined that insuring the water treatment plant and eight (8) municipal wells satisfies the requirements of both the 2018 and 2019 Bond Resolutions and is the most economically feasible option; and

WHEREAS, the total premium to provide coverage for the water treatment plant and eight (8) municipal wells is $43,252.00.

IT IS HEREBY ORDERED by the Mayor and Members of the Council of the City of Gautier, Mississippi that the proposal received from Colony Insurance Company to purchase optional property coverage to insure the water treatment plant and eight (8) municipal wells, as presented, is hereby approved.

IT IS FURTHER ORDERED that the City Manager and City Clerk are authorized to execute any and all documents necessary for this purpose including payment of annual premium.

Motion was made by **Councilman Vaughan,** seconded by **Councilwoman Martin,** and the following vote was recorded:

AYES: **Phil Torjusen**
Mary Martin
Cameron George
Richard Jackson
Casey Vaughan
Rusty Anderson
Adam Colledge

NAYS: **None**

_____
MAYOR

ATTEST:

_____
CITY CLERK

Passed and Adopted by the Mayor and Members of the Council of the City of Gautier, Mississippi, at the meeting of December 15, 2020.

CITY OF GAUTIER
MEMORANDUM

To: Paula Yancey, City Manager
From: LaKeisha Hill, Human Resources Generalist
Date: 12/1/2020
Subject: Approve Utility Infrastructure - Optional Property Coverage

---

REQUEST:
Approve proposal by Colony Insurance Company for property coverage on the water ionization plant and the eight (8) municipal wells through HUB International.

BACKGROUND:
HUB International currently serves as the city's "Broker of Record" in regards to Property and Casualty Insurance. HUB International has negotiated with providers and presented the best rate and coverage options to the City Manager for approval.

DISCUSSION:
The 2018 Bond and 2019 Bond resolutions require insurance to be carried on portions of the system that are of an insurable nature and then only in the amount carried by similar municipalities. It was found that underground lines and elevated water tanks are generally not insured by county or municipal utilities. The City also determined after much discussion with insurance professionals that it is not economically feasible to insure the lift stations. The high cost of premiums is initially cost prohibitive. Furthermore, high deductibles more or less guarantee no claim will exceed said deductibles. There is no economic benefit to be derived from insuring the water tanks and lift stations. The City has asked for and received competitive proposals to insure both the water ionization plant and the eight (8) municipal wells. Total insurance premium for FY2021 will be $43,252.00.

RECOMMENDATION:
It is recommended the Gautier City Council approve the proposals for property-optional infrastructure insurance for FY2021 on the water ionization plant and the eight (8) municipal wells and authorize payment of the same.

ATTACHMENTS:
1. PROP 20-21 Inland Marine - Infrastructure

HUB

Commercial Insurance Proposal

City of Gautier

Prepared By

Greg Cullom

November 24, 2020

Hub International Gulf South
300 Concourse Boulevard
Ridgeland, MS 39157
(601) 607-5500
www.hubinternational.com

Service Team

Our ability to provide superior service starts with quality people.
The key individuals assisting you with your account are:

Account Producer
Greg Cullom
p (228) 897-6727
greg.cullom@hubinternational.com
Account Producer
Diane L Moore
p (228) 897-6747
Diane.l.moore@hubinternational.com
Account Manager
Dustin Mauffray
p (228) 897-6706
dustin.mauffray@hubinternational.com
Customer Services Representative
Mishon Elmer
p 228-897-6703
Mishon.elmer@hubinternational.com
Claims
Billie Mire
p 601-607-5430
Billie.mire@hubinternational.com

Premium Summary

Description Of Coverage	Expiring Premium	Proposed Premium
Inland Marine (includes taxes and fees)	$ 43,805	$ 43,252
Total Estimated Annual Premium*	**$ 43,805**	**$ $43,252**

*All quoted premiums are annual estimates and may change due to year end audits or mid-term policy changes.

**Carrier may apply a short-rate penalty should you request a policy be cancelled mid-term.

NOTES:

We are offering a short term policy this renewal in order to sync the effective dates with the remainder of City of Gautier's account – on 09/30/21. Premium shown above is for a term of 12/1/20 to 09/30/21.

Confirmation to Bind

CONFIRMATION TO BIND AGREEMENT

I, City of Gautier, acknowledge that we have reviewed the enclosed proposal and confirm HUB's acknowledgment to bind the programs described within:

As Proposed: _____

Changes as Follows:

Binding Subjectivities:

- Signed Confirmation to Bind
-

Accepted By: _____ Date: _____
Name & Title

Electronic Documents

CONSENT TO RECEIVE ELECTRONIC DOCUMENTS

City of Gautier (Client) hereby consents and agrees to receive electronic documents related to insurance coverage procured or quoted by, or Client's business relationship with, Hub International Gulf South (HUB). In addition to traditional manners of delivery, Hub may transmit documents to Client through electronic means, such as electronic mail and facsimile. The documents that may be transmitted electronically include, but are not limited to, the following: insurance policies; policy information pages; coverage forms; endorsements; applications; binders; certificates and evidence of insurance; invoices; premium finance agreements; audit statements; loss control reports; claim reports; correspondences; notices of cancellation and non-renewal; and policies related to the operation of HUB's business.

Please provide e-mail address of proper recipient below.

_____

I approve of receiving policies and other documentation, when available, via electronic mail.

Please consider the Environment

_____ _____

Signature Date

Named Insureds

City of Gautier

NOTE: Review Named Insured(s) and Property Owners

Please check to ensure all appropriate entities are named. Any entity (including Partnerships, corporations, joint ventures, individuals, etc.) not listed above is not included as a Named Insured. Entities with limited interests in policies, such as those who are to be included as an Additional Insured, Loss Payee, Lessor, or Mortgagee, are listed in the relevant coverage sections of this proposal.

Information Summary

First Named Insured: City of Gautier

The First Named Insured will be the insured that is:
A. Responsible for payment of premium
B. Authorized to make changes in policy with approval of insurance company
C. Authorized to cancel the policy
D. Designated to receive notice of cancellation

Mailing Address: 3330 Highway 90

Gautier, MS 39553

Coverage Becomes Effective 12:01 A.M. Standard Time at your mailing address.

Locations: See Attached

Effective Date: **12/1/2020**

DISCLAIMER: This document contains only a summary of your insurance coverage. It is your responsibility to carefully and completely review the actual policies for actual terms, limits and conditions. In the event of any inconsistency between the terms of the policies and the provisions of this document, the terms of the policies will govern and control.

Locations

Client: City of Gautier
Carrier: Colony Insurance Company
A.M. Best Rating: A-(XIV)
Policy Term: 12/1/2020 to 09/30/2021

Loc #	Bldg #	Description and Address	City	State	Zip
1	1	Infrastructure - Well Lark Rd	Gautier	MS	39553
2	1	Infrastructure - Well Westgate Subdivision	Gautier	MS	39553
3	1	Infrastructure - Well Lark Road	Gautier	MS	39553
4	1	Infrastructure - Well Singing River Mall	Gautier	MS	39553
5	1	Infrastructure - Well 3330 Highway 90	Gautier	MS	39553
6	1	Infrastructure - Well Honduras Drive	Gautier	MS	39553
7	1	Infrastructure - Well Beasley Drive	Gautier	MS	39553
8	1	Infrastructure - Well Highway 57	Gautier	MS	39553
9	1	Water Ionization Plant 3305 Gautier-Vancleave	Gautier	MS	39553

Property

Client: City of Gautier
Carrier: Colony Insurance Company
A.M. Best Rating: A-(XIV)
Policy Term: 12/1/2020 to 09/30/2021

The Commercial Property policy covers your buildings, contents or specified other property against perils defined by the form, subject to the terms of the policy. Coverage for off-premises property is limited.

Coverage/Limits

Loc #	Bldg #	Address	Description		
1	1	Lark Rd, Gautier, MS	Infrastructure - Well		
Subject of Insurance	**Limit**	**Cause of Loss**	**Deductible**	**Coins %**	**Valuation**
Well - 180 Gallons	$450,000	Broad	$10,000	80%	Actual Cash Value

Loc #	Bldg #	Address	Description		
2	1	Westgate Subdivision, Gautier, MS	Infrastructure - Well		
Subject of Insurance	**Limit**	**Cause of Loss**	**Deductible**	**Coins %**	**Valuation**
Well - 250 Gallons	$450,000	Broad	$10,000	80%	Actual Cash Value

Loc #	Bldg #	Address	Description		
3	1	Lark Road, Gautier, MS	Infrastructure - Well		
Subject of Insurance	**Limit**	**Cause of Loss**	**Deductible**	**Coins %**	**Valuation**
Well - 500 Gallons	$500,000	Broad	$10,000	80%	Actual Cash Value

Loc #	Bldg #	Address	Description		
4	1	Singing River Mall, Gautier, MS	Infrastructure - Well		
Subject of Insurance	**Limit**	**Cause of Loss**	**Deductible**	**Coins %**	**Valuation**
Well - 600 Gallons	$500,000	Broad	$10,000	80%	Actual Cash Value

Loc #	Bldg #	Address	Description		
5	1	3330 Highway 90, Gautier, MS	Infrastructure - Well		
Subject of Insurance	**Limit**	**Cause of Loss**	**Deductible**	**Coins %**	**Valuation**
Well - 600 Gallons	$500,000	Broad	$10,000	80%	Actual Cash Value

Loc #	Bldg #	Address	Description		
6	1	Honduras Drive, Gautier, MS	Infrastructure - Well		
Subject of Insurance	**Limit**	**Cause of Loss**	**Deductible**	**Coins %**	**Valuation**
Well - 200 Gallons	$450,000	Broad	$10,000	80%	Actual Cash Value

Loc #	Bldg #	Address	Description		
7	1	Beasley Drive, Gautier, MS	Infrastructure - Well		
Subject of Insurance	**Limit**	**Cause of Loss**	**Deductible**	**Coins %**	**Valuation**
Well - 720 Gallons	$500,000	Broad	$10,000	80%	Actual Cash Value

Loc #	Bldg #	Address	Description		
8	1	Highway 57, Gautier, MS	Infrastructure - Well		
Subject of Insurance	**Limit**	**Cause of Loss**	**Deductible**	**Coins %**	**Valuation**
Well - 600 Gallons	$500,000	Broad	$10,000	80%	Actual Cash Value

Loc #	Bldg #	Address	Description		
9	1	3305 Gautier-Vancleave, Gautier, MS	Water Ionization Plant		
Subject of Insurance	**Limit**	**Cause of Loss**	**Deductible**	**Coins %**	**Valuation**
Water Ionization Plant	$2,300,000	Broad	$10,000	80%	Actual Cash Value

Property Coverage Definitions

BLANKET INSURANCE

This coverage allows for a single limit of insurance to apply to two or more property items at one location, or to two or more kinds of property at several locations, instead of a specific amount applying to a specific subject of insurance. It allows you to shift property values with no impairment of recovery, as long as the total amount of insurance carried complies with the coinsurance requirement stated in the policy.

BUILDINGS

This coverage provides protection for permanent structures listed on the policy. Completed additions, permanently-installed fixtures, machinery and equipment, outdoor fixtures, owned personal property used to service, repair or maintain the building and additions under construction or repair are all included in this definition. Various additional endorsements and extensions can also be added to ensure that adequate protection is being provided for your particular situation.

PERSONAL PROPERTY

This coverage protects personal property owned by your firm and used in your operations. Furniture and fixtures, equipment and machinery, raw stock, and finished goods all fall within this category. Various additional endorsements and extensions can also be added to ensure that adequate protection is being provided for your particular situation.

BUSINESS INCOME AND EXTRA EXPENSE

When selected, this coverage insures you against loss of business income (including any continuing normal operating expenses) that you experience because of a suspension of your business when insured property has been damaged by a covered peril. It also covers those necessary extra expenses you incur to operate your business during that period of time your damaged property is being repair or replaced.

COINSURANCE

A policy may contain a coinsurance provision requiring that the limits of insurance be a minimum percentage (usually 80%) of the insurable value of your property. If the limits of your policy are less than what is required by this provision, then any claim payment made to you may be reduced by the same percentage as the deficiency. For example, covered property worth $100,000 may require a minimum of 80%, or $80,000, of coverage for compliance with the policy's coinsurance requirement. If only $60,000 of coverage is carried (25% less than the required $80,000), then any loss payment would be reduced by 25%.

DEDUCTIBLE

The deductible provision specifies the amount that will be deducted from any payment made to you because of a covered loss.

VALUATION

- *ACTUAL CASH VALUE VALUATION* – This valuation method pays for the cost to repair or replace damaged property with like kind and quality, less reasonable deductions for wear and tear, deterioration, and economic obsolescence.

- *AGREED VALUE VALUATION* – This coverage is used to remove the coinsurance requirement from your property policy. With it your company agrees that the limits of insurance purchased by you are adequate, and any coinsurance requirements will be waived in the event of a covered loss.

- *REPLACEMENT COST VALUATION* – This loss valuation method pays for the cost to repair or replace damaged items with like kind and quality without deduction for depreciation. This is important since you could face a substantial loss if you must replace property at today's prices but receive only the depreciated value of the property that was destroyed.

CAUSES OF LOSS – SPECIAL FORM

This coverage will protect covered property against direct physical loss arising from any cause not specifically excluded. The advantage of this form is that the insurance company must prove that a loss is specifically excluded in order to deny coverage under the policy. ***Some examples of exclusions include:***

- Backup of sewers and drains
- Mysterious disappearance of property
- Wear and tear, latent defect inherent vice, insects and vermin
- Dampness or dryness of the atmosphere and changes in the temperature
- Artificially generated electrical currents
- Explosion of steam boilers
- Flood
- Earthquake
- Mold
- Terrorism

Marketing Summary

Carrier	Status
Ace American Insurance	Not a market for covering wells and water ionization plant
AIG	Declined risk due to fixed exposure, and below size min
Allianz Global Specialty	Out of appetite
Arch Specialty	No interest in pursuing
Arrowhead General Insurance Agency	Can't write this class
Beazley USA Services	No interest in pursuing
Burlington Insurance Company	No interest in pursuing
Colony	Offered terms - 18% increase/same terms
Endurance American Specialty Ins Co	No interest in pursuing
Everest Insurance Company	Declined - outside of appetite
General Star Management Company	No interest in pursuing
IAT Specialty	Unable to consider due to wind and flooding exposure that comes with it's proximity to the Gulf coast. Can consider ex wind and ex flood.
Intact Insurance Group USA LLC	Declined - too coastal
Ironshore Insurance Services LLC	Not interested in pursing
Kinsale Capital Group Ltd	No interest in pursuing
Markel Service Inc.	Xs only
Navigators Insurance Company	Not interested in pursing
PREXA	Declined outside of appetite
RLI Insurance Group	Declined outside of appetite
RSUI Group	Declined outside of appetite
Safehold Special Risks Inc	Not a good fit
Seneca Insurance	Ex wind ony in coastal areas
Starr Specialty Lines	MP $50k
United National Group	Not interested in pursing
Validus Underwriters Inc	Declined outside of appetitie

Velocity Risk Underwriters, LLC	Declined occupancy
Ventus Risk Management	Declined outside of appetite

Carrier Rating

A.M. Best Company is the leading provider of ratings, news and financial data for the insurance industry worldwide. Their Best Financial strength rating is an independent option of the insurer' financial strength and ability to meet its ongoing insurance policy and contract obligations. The rating is based on a comprehensive and qualitative evaluation of a company's balance sheet, strength, operating performance and business profile.

As professional agents it has long been our established policy to make every effort to deal only with companies having a Best's Rating of A++, A+, A or A-, which are the four highest ratings available, and a minimum of $50 million in Policyholders' Surplus. **It must be noted that neither HUB International nor any affiliated company guarantees the financial solvency of any insurance carrier**. The following list outlines the A. M. Best Company rating scale and associated descriptions.

Financial Strength Ratings: An A.M. Best's Financial Strength Rating is an opinion of an insurer's ability to meet its obligation to policyholders.

A.M. Best Rating			
A++, A+	Superior	C, C-	Weak
A, A-	Excellent	D	Poor
B++, B+	Very Good	E	Under Regulatory Supervision
B, B-	Good	F	In Liquidation
C++, C+	Marginal		

Financial Size Categories: A.M. Best assigns each letter rated insurance company a Financial Size Category. This is designed to provide a convenient indicator of the size of a company in terms of its statutory surplus and related accounts.

Financial Size Categories (In millions of U.S. dollars)			
Class I	Up to 1	Class IX	250 to 500
Class II	1 to 2	Class X	500 to 750
Class III	2 to 5	Class XI	750 to 1,000
Class IV	5 to 10	Class XII	1,000 to 1,250
Class V	10 to 25	Class XIII	1,250 to 1,500
Class VI	25 to 50	Class XIV	1,500 to 2,000
Class VII	50 to 100	Class XV	Greater than 2,000
Class VIII	100 to 250		

General Statement

Coverage and Limits

This exhibit describes coverage, amounts, limits, etc., but it does not take the place of the actual insurance policies. While we have made every effort to remove inaccuracies from this report, some may exist. For definitive coverage provisions and exclusions, refer to the policies, endorsements and amendments.

For property quotes, we have used values that you provided. Please carefully examine these values and/or secure an outside appraisal to ensure their accuracy and adequacy.

This proposal is based upon exposures to loss that currently exist and were made known to the agency. All changes and new exposures need to be reported by you, so that proper coverage may be offered.

Higher limits of liability may be available for additional premium.

Insurer Solvency

Hub International is not technically qualified to comment on the solvency or claims-paying ability of any insurer. In an effort to help you assess the quality of the carrier(s), we have provided rating information from the A.M. Best rating organization. A more detailed report is available on request.

We caution you that catastrophic occurrences or other business matters can quickly have a negative impact on any insurer's financial condition. State "guarantee" funds created for the protection of policyholders may limit or preclude access to reimbursement for certain types of claims and/or to companies with significant net worth.

Non-Admitted Insurer

If a non-admitted insurer is providing coverage there is no protection by the state guaranty fund in the event of the insurer's insolvency.

Premium Payment

Regardless of the payment method you choose, it is important to note that ***carriers are not obligated to reinstate cancelled policies.***

Agency Bill Items: If your premium is billed by Hub International, payment is due on the effective date of the coverage or installment. Endorsement and audit premium adjustments are due on the date billed. Failure to promptly remit may result in cancellation of your coverage.

Company Bill Items: If your policy is a "company bill" contract, you must remit your payment directly to the insurance company on a timely basis. Unfortunately, insurers do not always notify us about the status of a "company bill" payment, so you can't rely on us to remind you about overdue premiums or policy cancellations. If you encounter any billing problem or have a billing concern, please call us immediately, so that we can investigate for you.

Premium Financing: You may ask us to "finance" your premium through an independent finance company. This is an unforgiving payment system. Please carefully review the finance agreement for full details on the late payment and finance charges that apply. Your insurance policy is collateral for the loan. If you miss a payment, coverage will be cancelled. Because we may not always receive late notices, Hub International cannot accept responsibility for following up on late payments or threatened "non-payment" cancellations. Please do not count on us to remind you to make the payment.

This proposal contains only a summary of your insurance coverage and policy. It is your responsibility to carefully and completely review the entire policy for its actual terms, limits and conditions. In the event of any inconsistency between the terms of the policy and the provisions of this proposal, the terms of the policy will govern and control.

How We Get Paid

HUB International takes pride in the services our brokerages provide to you, our client, for insurance and risk management programs. For our efforts we are compensated in a variety of ways, primarily in the form of commissions and contingency amounts paid by insurance companies and, in some cases, fees paid by clients or third parties. The means by which we are compensated are described below.

Commission income - Commission, normally calculated as a percentage of the premium paid to the insurer for the specific policy, is paid to us by the insurer to distribute and service your insurance policy. Our commission is included in the premium paid by you. The individuals at HUB International who place and service your insurance may be paid compensation that varies directly with the commissions we receive.

Contingency income - We also receive income through contingency arrangements with most insurers. They are called “contingent” because to qualify for payment we normally need to meet certain criteria, usually measured on an annual basis. Contingency arrangements vary, but payment under these agreements is normally the result of growing the business by attracting new customers, helping the insurance company gather and assess underwriting information and/or working to renew the policies of existing insureds. There is currently no meaningful method to determine the exact impact that any particular insurance policy has on contingency arrangements. However, brokers tend to receive higher contingency payments when they grow their business and retain clients through better service. In other words, the amount of earned contingency income depends on the overall size and/or profitability of all of a group of accounts, as opposed to the placement or profitability of any particular insurance policy. For this reason, the individuals involved in placing or servicing insurance are rarely, if ever, compensated directly for the contingent income that we receive.

Supplemental Commissions - Some insurance companies have recently replaced contingent commissions with supplemental commissions. These commissions, in fixed amounts, are established annually in advance based on historical performance measured by criteria comparable to those by which contingent commissions are calculated. We refer to these commissions as guaranteed supplemental commissions, or “GSCs”.

Fees paid by clients - On occasion, with more complex business insurance programs and where additional resources, products or services are appropriate, a fee may be negotiated for placement of insurance coverage or additional services. Fees charged for the placement of insurance will be outlined in a proposal and approved, usually in writing, prior to the insurer binding coverage. On occasion, we may receive both commissions and client-paid fees for placing insurance, which generally will be disclosed in writing to you in advance. In certain circumstances clients pay us mutually agreed upon fees for additional services, such as third party administration of employee benefits or workers’ compensation programs.

Wholesale Operations - We own wholesale insurance brokerages in both the U.S and Canada. These are intermediaries through which other brokers, typically retail brokers that have a relationship and deal directly with their clients, place coverage. Our own retail brokers may place client policies through HUB-owned wholesale brokers. In such cases, both the HUB retail broker and the HUB wholesale broker will earn commissions, and they are included in the client’s premium payment. Ordinarily wholesale brokers, whether owned by HUB International or not, are included in the transaction because they offer products that are particularly suitable to a client’s needs that are not available through normal insurance brokerage retail channels.

Other Compensation and Benefits - We may receive revenue or further benefits from our insurance brokerage activities in other ways, including, but not limited to, from insurance company promotional events, payments from insurers for promotional marketing and/or employee training and development, fees or a percentage of the interest paid to us for the administration of premium finance contracts, interest paid to us by financial institutions earned on fiduciary or trust accounts in which we hold your premium payments pending remittance to the insurance company, and fees paid to us for policy and/or claims administration and/or loss control services that we provide.

Related Party Transactions - In limited circumstances, our subsidiaries or employees may have interests in insurers and reinsurers with whom policies are placed. We own a reinsurance broker that arranges reinsurance for carriers. It is possible that coverage placed by our retail brokers could be reinsured pursuant to placements

made by our reinsurance subsidiary. Ownership of a reinsurance broker also creates an additional, mutually beneficial dimension to our relationships with insurance companies.

Customer Centric Carriers - We have access to the products and services of hundreds of insurers. However, we believe our ability to provide the best combination of products, service, value and ongoing access to capacity is enhanced by focusing on a manageable number of carrier relationships. These strategic relationships include many of the most respected national and regional insurance companies in the insurance industry (the “Strategic Carriers”). Although we will continue to access our other insurance company relationships where appropriate, we expect that many of our clients’ insurance needs may be met through the Strategic Carriers. The Strategic Carriers may pay us enhanced compensation, which we intend to use in part to invest in initiatives to improve our ability to serve our customers’ and to optimize their insurance buying experience. A portion of any enhanced compensation from our Strategic Carriers may be used to incentivize our employees to prioritize, investigate and access the products and services of our Strategic Carriers for the purpose of consolidating the number of insurance markets we deal with, while at the same time addressing the needs of our clients. More information regarding our Strategic Carrier relationships is available upon request from your HUB International insurance advisor or by visiting our website at www.hubinternational.com.

Our goal is to be your insurance brokerage of choice. We know you have many brokerages to choose from, so to earn your confidence, we hold ourselves to the highest standard of service, a standard reflected in our written Client Commitment - we call it the “The HUB Advantage.” We hope you will review the principles embodied in The HUB Advantage, a copy of which is attached for your convenience. You should also feel free to visit our website at www.HUBinternational.com for more information regarding HUB International and how we do business.

Please also feel free to ask any questions about our compensation generally, or as to your specific insurance proposal or placement, by contacting your HUB broker or customer service representative directly, or by calling our client hotline at 1-866-857-4073.

We want you to choose a HUB International broker to be your insurance advisor – and we intend to make your decision an educated one.

The HUB Advantage

Our Commitment - The HUB Advantage

HUB International is dedicated to maintaining and upholding the highest standards of ethical conduct and integrity in all of our dealings with you, our client. We want to be your trusted risk advisor, and as such, we need to earn your confidence. So we are making a promise. We call it The HUB Advantage. Our mission is to make the advantage yours - and this is our commitment.

- We strive to secure the most favorable terms from insurers, taking into account all of the circumstances - the risk you need to insure, the cost of insurance, the financial condition of the insurer, the insurer's reputation for service, and any other factors that are specific to your situation.

- We are open and honest as to how we are paid for placing your insurance. Our answers to your questions will be forthright and understandable. When we intend to seek a fixed fee for our efforts, we will disclose it to you in writing and obtain your approval prior to coverage being bound.

- You make the ultimate decision as to both the terms of insurance and the company providing your coverage. Our objective is to provide you with choices that meet your insurance needs, and to educate you so your decision is fully informed and best suited to your circumstances.

- We comply with the laws of every jurisdiction in which we operate, including those that apply to how insurance brokerages and agencies are paid. If the laws change, we will respond in a timely and appropriate manner.

We take our responsibility to our customers very seriously. If at any time you feel that we are not fulfilling your expectations - that we are not meeting our Client Commitment - please contact your account executive or call our toll free client hotline at 1-866-857-4073, and your concerns will be addressed as soon as possible.

The HUB Advantage

The privilege is ours, but the advantage is yours.

Claims Management

Claims Management Overview

In many organizations the cost of claims and resulting premiums is significant, including direct and indirect costs. Litigation, employee injuries and property losses can be devastating to any corporation, operation, and their employees. Whether it's general liability, workers compensation, or property claims, a poorly designed claims management program can be as detrimental as having no program, and claims that are not continually reviewed or managed can result in unintended outcomes.

HUB's Claim Consultants partner with our clients to understand their goals, objectives, and challenges. We work with our clients to develop and implement claims management solutions that minimize their Total Cost of Risk. One of HUB's many strengths is our collaborative approach amongst our Claims, Risk Services Team, the producer and account manager and our colleagues throughout HUB worldwide. Our Teams regularly work together, across regions and countries to continue to bring the depth of our expertise to every corner of the globe.

Claims Management Services Available to Our Clients

HUB is committed to providing a wide range of services to our clients. We work to implement best practice claims management processes, claims analysis, serving as an advocate, and addressing specific issues before and as they occur.

- **Client Advocacy / Carrier Oversight**
  - Oversight/Coordination of carrier claims handling activities
  - Regular communication between clients and claims service providers
  - Providing outsourced expertise for complex & challenging claims
- **Claims Reviews**
  - Facilitated between the HUB Claim Consultant, Insurance Carrier, and Client Representative(s)
  - Establish claim file expectations and action plans
- **Reserve Analysis**
  - Review of claim providers reserving practices
  - Ensures that excess funds are not tied up in reserves
  - Ensure that financial liabilities are divulged clearly and accurately
- **Coverage Disputes**
  - Advocating and providing assistance with evaluating and challenging insurance carrier coverage denials on your behalf
- **Claim Audits**
  - Strategic audit of client's claim files to uncover opportunities to improve quality and reduce claim costs
  - Ensures that claims service providers are performing properly for the client
- **Preloss Planning**
  - Strategic planning based on past results
  - Provide training in identifying information key to the defense of a claim & incident response
  - Create incident reports for insured as a tool for incident response
  - Ensures a fair understanding of claims process in advance of the loss and helps mitigate downtime
  - Identifies issues before they arise
- **Third Party Administrator (TPA) Selection**
  - Assistance with selecting a Third-Party Administrator (TPA)
  - Development of the best in class program/process to manage claims
- **Claim Data Analysis**
  - Review of claim data to identify trends and primary cost drivers
  - Results in action plans that can be implemented with the designated HUB Risk Consultant
- **Settlement Evaluation**
  - Assistance in analyzing and structuring settlements, executing early resolutions, and exploring alternative dispute resolution options
- **Litigation Management**
  - Assistance with managing and minimizing legal defense costs during claim resolution
  - Executing communication, developing accepted activities, and creating a litigation plan
  - Review leases and contracts to identify risk transfer opportunities
  - Tender claims on behalf of clients as necessary
- **Employer Claim Management Practices**
  - Best Practice benchmarking of client's claims practices
  - Development of internal claims practices to reduce costs
- **Medical Case Management Program Design**
  - Assistance with developing Medical Case Management Programs, including aggressive treatment plans that incorporate cost control techniques
- **Dispute Resolution Options**
  - Guidance with options necessary to bring matter to ultimate resolution
- **Subrogation/Second Injury Fund Recoveries**
  - Ensuring the claims service provider has a process for identifying opportunities and maximizing recovery of expenses when a third party is negligent or when the

state provides second injury funds

This list is not all-inclusive. Your designated HUB Claims Services team member(s) will meet with you to confirm goals and develop a customized service plan, deliverables and timelines that will address your needs and exceed expectations.

Risk Services

Risk Services Overview

Risks emerge and evolve, and the exposures always have the potential for high frequency and high costs. Injuries/illnesses, downtime, reputational issues, and losses can result in significant direct and indirect costs that can devastate any corporation, operation, and its employees. Additionally, monitoring and following regulatory requirements and industry best practices requires significant knowledge and a wide range of expertise, and a partner that stays focused on protecting your organization.

As a leading provider for risk management services, HUB International partners with our clients to work towards common goals, reducing their Total Cost of Risk (TCOR) and making our client's organizations more resilient. With experts in all functional areas and over 100 industries, our team has the proven knowledge and experience to assist our clients in identifying current/ potential risks and implementing controls to reduce exposure to loss. Our team members include:

- Board-Certified Safety Professionals
- Certified Risk Managers
- Certified Occupational Health Nurses
- Certified Construction Risk Specialists
- Environmental Risk Managers
- Property Protection Specialists
- Certified Hazardous Materials Managers
- Certified Industrial Hygienists
- Security Professionals
- Toxicologists
- Risk Technology Experts
- Workers Compensation Experts
- Professional Engineers
- Business Continuity Planning Experts
- Emergency Response Professionals
- Cyber Risk Management Experts
- Absence Management Professionals
- Product Liability Professionals
- General Liability Experts
- Tribometrists (Slip/Fall Experts)
- Travel Risk Management Professionals

Our team has the proven knowledge and experience to assist our clients in identifying current / potential risks and implementing controls to reduce exposure to loss.

Consulting Methodology & Approach

Our consulting approach is designed to be timely, result-oriented, and focused where it counts - minimizing hazardous exposures and claims. Our five-step consulting approach:

1. Identify exposures, hazards, and losses
2. Evaluate current controls
3. Develop solutions
4. Implement solutions
5. Ongoing Measurement and Evaluation

This partnership approach builds the framework to create and implement effective, long-range solutions.

Risk Services Available to Our Clients

HUB International specializes in a wide variety of risk services products and consultancy services. The specific services to be provided by the HUB Risk Services Division will be based on your goals as well as the application of our consulting approach and methodology.

Risk Control Services:

- Regulatory Compliance
- Ergonomics Improvement
- Client Advocacy / Carrier Oversight
- Property Risk Engineering
- Safety & Environmental Management
- Fleet Risk Management
- Construction Safety Management
- Environmental Management
- OSHA 10/30hr Courses

Specialty Risk Services:

- Cyber Risk Management
- Enterprise Risk Management
- Workforce Productivity
- Crisis Management
- Business Continuity Management
- Emergency Management
- Security Management
- High Net Worth/Family Office Risk Management
- Clinical Risk Management
- Entertainment Risk Management
- Travel Risk Management

Strategic Partnerships:

- Online Training Providers/Developers
- Property/Process Engineering Firms
- Web-Based Continuity Planning Systems
- Environmental Testing Firms
- Art Preservation/Recovery Firms
- High - Risk Claims Identification Tools
- Pre-Hire Screening Tools
- Actuarial / Forensic Accounting Firms
- Telematics Providers
- Cyber Risk Assessment Firms

- Management/Employee Training
- Audit and Inspections
- Safety Project Review / New Facility Protection Reviews
- Product Liability Assessments
- Hazard Assessments
- Industrial Hygiene
- Environmental Compliance
- Risk Management Information System (HUB RMIS)
- Disaster Recovery Firms
- Outsourced Health Services Providers

This variety of disciplines enables HUB to respond to your specific risk control needs and objectives. Because we serve clients of all sizes, we can offer solutions that are properly scaled to meet the needs of your business.

Recommendations

BUILDING AND PERSONAL PROPERTY FORM

Coinsurance. Buildings and Business Personal Property limits should be reviewed to determine if they are adequate and in compliance with the coinsurance requirements under your policy.

Off-Premises Services – Direct Damage. Coverage for damage resulting from an off-premises interruption of power or other utility service is excluded. This coverage can be added by endorsement and is recommended if your property is subject to this exposure. Coverage is available with and without spoilage.

Replacement Cost. Loss settlement under the form is on an actual cash value basis which is defined as current replacement cost less physical depreciation. Replacement cost coverage would eliminate depreciation if property is actually repaired or replaced. We recommend this coverage enhancement.

Signs and Glass. Coverage applying to outdoor signs and building glass is extremely limited under the form. Separate coverage is available for this property and is recommended if there is an exposure.

Incidental Property. Coverage on outdoor fences, radio and television antennas, trees, shrubs and plants, including debris removal expense is covered only for fire, lightning, explosion, riot or civil commotion or aircraft. The maximum which will be paid is $1,000 with a limit of $250 for any one tree, shrub or plant. Coverage is available by endorsement and is recommended if there is an exposure.

Debris Removal. The cost to remove debris of covered property under the form is extremely limited. Coverage is available by endorsement and is recommended.

Ordinance or Law. The form excludes any loss, or increase of loss, caused by the enforcement of any ordinance or law regulating the construction, use, or repair of any property. Coverage for loss to the undamaged portion of the building, demolition cost and increased cost of construction arising out of ordinances or laws can be provided by endorsement and is recommended.

BUSINESS INCOME AND/OR EXTRA EXPENSE COVERAGE FORM

This coverage is designed to provide protection against loss of income, payment of necessary continuing expenses, and extra expenses from a covered cause of loss. Flood is a standard exclusion on these form.

It may be possible to purchase higher limits as well as Flood Coverage for Business Income and Extra Expense on a limited basis.

Business Income. Business Income coverage is recommended to provide protection against loss of income and payment of necessary continuing expenses arising from suspension of your operations due to physical damage to your property by an insured cause of loss.

Extra Expense. Extra Expense is recommended to pay for costs in excess of normal operating expenses which you incur to continue operations without interruption after a direct property damage loss.

Rental Income. Coverage for loss of rental income resulting from untenantability of all, or a portion, of the insured building due to damage or destruction of real or personal property by an insured peril is available and is recommended if your operations include this exposure.

Coinsurance. Limits under these forms should be reviewed to determine if they are adequate and in compliance with any coinsurance requirements under your policy.

Off-Premises Services – Time Element. Coverage for damage resulting from an off-premises interruption of power or other utility service is excluded. Coverage is available by endorsement and is recommended if your operations are subject to this exposure.

COMMERCIAL GENERAL LIABILITY FORM

Pollution. Pollution is an excluded peril under the Commercial General Liability and Garage Liability policies. Oil and other waste storage on your premises may subject you to potential pollution liability. Coverage is available subject to high minimum premiums.

Underground Storage Tanks Liability. If you have underground storage tanks subject to 1988 EPA regulations, insurance covering this exposure should be pursued.

Liquor Liability. This form excludes liquor liability exposures of insured whose business is the manufacture, sale, or serving of alcoholic beverages. Separate liquor liability coverage is available and recommended if your operations include these exposures.

Care, Custody and Control. This form excludes coverage for property damage to property in your care, custody or control. If your operations include these exposures, separate coverage is available and recommended.

Watercraft. This form excludes coverage on owned watercraft and non-owned watercraft over 25 feet. If your operations include these exposures, separate coverage is available and recommended.

Aircraft. This form excludes coverage on owned and non-owned aircraft. If your operations include these exposures, separate coverage is available and recommended.

EMPLOYEE BENEFIT LIABILITY

Provides coverage for negligent acts, errors or omissions in management of employee benefit plans.

FIDUCIARY LIABILITY

Provides coverage for ERISA (Employee Retirement Income Security Act) exposures of fiduciaries for specifically designated plans to the extent that they are caused by a "wrongful act".

COMMERCIAL CRIME FORM

Employee Dishonesty. Employee Dishonesty is recommended to provide coverage for the loss of money, securities and other property arising out of dishonest acts of your employees. Coverage is required by law for your pension plan.

Depositor's Forgery. Forgery or alteration coverage is recommended to protect you against loss due to the forgery or alteration of checks, bank draft, promissory notes, and similar financial instruments drawn on your bank account.

Theft, Disappearance and Destruction. Theft, Disappearance and Destruction including coverage for loss inside and outside premises is recommended to protect your money and securities from loss while within your premises and while outside the premises while in the care and custody of a messenger.

BOILER AND MACHINERY COVERAGE FORM

Property coverage excludes explosion of steam boilers, steam pipes, steam turbines, or steam engines; loss caused by mechanical breakdown, including rupture or bursting caused by centrifugal force including loss to refrigeration equipment and damage to electrical and electronic equipment due to electrical arcing and power surges. The Boiler and Machinery policy is designed to cover these losses to your property and loss to property of others.

COMMERCIAL INLAND MARINE FORM

Accounts Receivable. Accounts Receivable coverage is recommended to protect against loss arising out of destruction to your accounts receivable records. Coverages include amounts due from customers that the insured cannot collect, collection expenses in excess of normal, expenses incurred in reconstructing accounts receivable records and interest charges on loans to offset uncollectible amounts pending loss settlement.

Valuable Papers and Records. Valuable Papers and Records coverage is recommended to protect you against accidental loss or damage from a covered cause of loss to valuable papers and records that belong to you or are in your care, custody, and control.

Electronic Data Processing (EDP) Form. EDP coverage is recommended to provide specialized insurance on your computer equipment, information storage media and expenses or income loss related to EDP losses.

Motor Truck Cargo Form. Motor Truck Cargo coverage is recommended if you carry property of others for a fee. Coverage can also be provided on an owners form motor truck cargo policy insuring your goods being transported by your trucks.

Annual Transportation Form. This form is recommended if you ship goods by common (or contract) carrier. Most forms cover your property and property of others for which you are liable, including property that has been sold but not delivered.

Fuel Plus Endorsement. This endorsement is available for fuel wholesalers and provides coverage for Terminal Access Cards, Erroneous Delivery or Mis-delivery and Gas or Oil Contamination.

COMMERCIAL UMBRELLA COVERAGE

Umbrella coverage is recommended to provide catastrophic coverage for liability claims which exceed your underlying liability insurance or to provide replacement coverage for underlying liability policies which are reduced or exhausted by loss. Minimum limits of $5,000,000 are recommended.

FLOOD INSURANCE

Coverage for Flood, whether from rising water or wind-driven water, is a standard exclusion on Buildings, Business Personal Property and Business Income and Extra Expense coverages. Limited coverage can be obtained from the National Flood Program for Buildings and Business Personal Property but not Business Income or Extra Expense.

Primary Flood coverage, as well as Excess Flood coverage, may be available on a limited basis.

DIRECTORS & OFFICERS LIABILITY

Directors and officers can be held personally liable if their negligent acts result in loss to the company or its shareholders. Claims can be initiated by shareholders, employees (wrongful termination, discrimination, defamation), customers (restraint of trade, deceptive trade practices), competitors (copyright, patent or business interference), and government regulators. Coverage is available and should be considered.

CYBER LIABILITY

This coverage provides protection against loss due most notably, but not exclusively, to a business' liability for a data breach. Several types of exposures can exist which require consideration when analyzing your cyber protection insurance.

EMPLOYMENT PRACTICES ERRORS & OMISSIONS

Commercial General Liability and Garage Liability policies generally do not provide coverage for employment-related injury to employees arising out of wrongful termination, discrimination and sexual harassment. The Employment Practices E&O policy provides this coverage. It is written specifically to provide coverage for indemnification and/or legal expense reimbursement arising out of wrongful discharge, discrimination and sexual harassment. Coverage can be provided for legal expenses only or indemnification for damages awarded.

GARAGE LIABILITY COVERAGE FORM

Broad Form Drive Other Car Coverage. This endorsement is used to afford liability, auto medical payments, uninsured/underinsured motorist, and physical damage coverage for specifically named individuals (and those individuals' spouses) while they are using a non-owned auto for their own personal use. If your owners, executive officers, partners, or employees are furnished company autos and have no personally owned autos, this coverage is recommended.

Pollution. Your Garage Liability policy includes what constitutes an almost total exclusion of coverage for incidents involving pollutants. Coverage is available subject to high minimum premiums.

Dealers Physical Damage. Provides Collision, Comprehensive or Specified Peril coverage on owned, floor planned or non-floor planned vehicles.

False Pretense. Your Garage Liability policy excludes coverage for theft of your vehicles if someone causes you to voluntary part with the auto by trick, scheme or under false pretense or if you acquire an auto from a seller who did not have legal title. False Pretense provides this coverage.

Dealers' Drive Away Collision. This endorsement deletes the exclusion applying to collision loss to autos driven or transported more than fifty road miles from the point of purchase or distribution to their destination.

Broad Form Products Coverage. This deletes the defective products exclusion which excludes property damage to any of your products if caused by a defect existing in the product at the time it was transferred to another. It is subject to a $250 deductible.

Broadened Coverage – Garages. This endorsement provides Personal Injury and Advertising Injury Liability, Host Liquor Liability, Fire Legal Liability, Incidental Medical Malpractice Liability, Non-Owned Watercraft or Aircraft, Additional Persons Insured Coverage, Automatic Liability Coverage-Newly Acquired Garage Businesses (90 days) and Limited Worldwide Liability.

Hired Auto Liability. Provides liability coverage on autos you lease, hire, rent or borrow (except from employee or partners).

Hired Auto Physical Damage. Provides physical damage coverage on autos you lease, hire, rent or borrow (except from employee or partners).

Non-Owned Auto Liability. Provides liability coverage for your business on autos owned by your employees' or partners while used in your business or your personal affairs.

WORKERS COMPENSATION & EMPLOYERS LIABILITY COVERAGE

Workers Compensation coverage may be mandatory under your State statutes.

BUSINESS AUTO COVERAGE

Hired Auto Liability. Provides liability coverage on autos you lease, hire, rent or borrow (except from employee or partners).

Hired Auto Physical Damage. Provides physical damage coverage on autos you lease, hire, rent or borrow (except from employee or partners).

Non-Owned Auto Liability. Provides liability coverage for your business on autos owned by your employees or partners while used in your business or your personal affairs.

Broad Form Drive Other Car Coverage. This endorsement is used to afford liability, auto medical payments, uninsured/underinsured motorist, and physical damage coverage for specifically named individuals (and those individuals' spouses) while they are using a non-owned auto for their own personal use. If your owners, executive officers, partners, or employees are furnished company autos and have no personally owned autos, this coverage is recommended.

Collision. Pays for loss of or damage to your owned automobiles from collision with another object or upset.

Comprehensive. Pays for loss of or damage to owned automobiles from perils other than collision.

Specified Perils. Pays for loss caused by fire, theft, wind, hail, earthquake, explosion, flood, vandalism, and the sinking burning, collision or derailment of any conveyance transporting the covered auto.

Pollution. Your Business Auto policy includes what constitutes an almost total exclusion of coverage for incidents involving pollutants. Coverage is available subject to high minimum premiums.

Rental Reimbursement. For specified autos and coverages, pays rental cost of substitute auto after covered loss to scheduled auto.

TERRORISM

You are hereby notified that under the Terrorism Risk Insurance Act, as amended in 2015, the definition of act of terrorism has changed. As defined in Section 102 (1) of the Act: The term “act of terrorism” means any act or acts that is certified by the Secretary of the Treasury – in consultation with the Secretary of Homeland Security, and the Attorney General of the United States – to be an act of terrorism; to be a violent act or an act that is dangerous to human life, property, or infrastructure; to have resulted in damage within the United States, or outside the United States in the case of certain air carriers or vessels or the premises of a United States mission; and to have been committed by an individual or individuals as a part of an effort to coerce the civilian population of the United States or to influence the policy or affect the conduct of the United States Government by coercion. Under the coverage, any losses resulting from certified acts of terrorism may be partially reimbursed by the United States Government under a formula established by the Terrorism Risk Insurance Act, as amended. However, your policy may contain other exclusions which might affect the coverage, such as an exclusion for nuclear events. Under the formal, the United States Government generally reimburses 85% through 2015; 84% beginning on January 1, 2016; 83% beginning on January 1, 2017; 82% beginning on January 1, 2018, 81% beginning on January 1, 2019 and; 80% beginning on January 1, 2020 of covered terrorism losses exceeding the statutorily established deductible paid by the insurance company providing the coverage. The Terrorism Risk Insurance Act, as amended, contains a $100 billion cap that limits United States government reimbursement as well as insurers’ liability for losses resulting from certified acts of terrorism when the amount of such losses exceed $100 billion in any one calendar year. If the aggregate insured losses for all insured exceed $100 billion, your coverage may be reduced. The portion of the annual premium that is attributable to coverage for acts of terrorism is $0.00 per $100. Of payroll and does not include any charges for the portion of losses covered by the United States government under the Act.

Mayor Torjusen made the motion to acknowledge bids for the Old Spanish Trail/Gautier Vancleave Road Sewer Improvements Project (RESTORE), as presented, and award the contract to DNA Underground, LLC. for the base bid, additive alternate No. 1, and additive alternate No. 2 in an amount not to exceed $1,838,760.00, contingent upon MDEQ approval. Councilwoman Martin seconded the motion. The vote was carried unanimously.

There came for consideration of the Mayor and Members of the Council of the City of Gautier, Mississippi, the following:

ORDER NUMBER 496-2020

WHEREAS, the City of Gautier has requested bids for Old Spanish Trail/Gautier Vancleave Road Sewer Improvements Project (RESTORE); and

WHEREAS, on November 19, 2020, sealed proposals were received; and

WHEREAS, the low bidder was DNA Underground, LLC., with a base bid of $1,261,575.00, with the possibility of several additive alternates; and

WHEREAS, the proper proposal documentation, including bid bond, is in order as required by the contract documents; and

WHEREAS, this project is being funded through MDEQ and local funds, and the contract award will be executed pending MDEQ approval; and

WHEREAS, the City will be responsible for any and all funding for this project over and above the grant funds;

WHEREAS, Seymour Engineering reviewed the bids and recommends awarding the contract to DNA Underground, LLC., as the lowest and best bid; and

WHEREAS, City staff also requests approval of additive alternates No. 1 and No. 2; and

WHEREAS, the Mayor and Members of Council find that it is in the best interests of the City to award and approve the base contract and additive alternates No. 1 and No. 2 with the lowest and best bidder, DNA Underground, LLC. in an amount not to exceed $1,838,760.00; and

WHEREAS, the Mayor and Council Members hereby find that DNA Underground, LLC. has submitted the lowest and best bid; and

IT IS HEREBY ORDERED by the Mayor and Members of the Council of the City of Gautier, Mississippi, that the award and execution of the base contract and additive alternates No. 1 and No. 2 with DNA Underground, LLC. for the Old Spanish Trail/Gautier Vancleave Road Sewer Improvements Project (RESTORE) is hereby authorized and approved.

IT IS FURTHER ORDERED that the City will be responsible for any and all funding for this project over and above the grant funds;

IT IS FURTHER ORDERED that the City Manager or City Clerk is authorized to execute any and all documents necessary for this purpose.

Motion was made by **Mayor Torjusen,** seconded by **Councilwoman Martin,** and the following vote was recorded:

AYES: **Phil Torjusen**
Mary Martin
Cameron George
Richard Jackson
Casey Vaughan
Rusty Anderson
Adam Colledge

NAYS: **None**

_____
MAYOR

ATTEST:

_____
CITY CLERK

Passed and Adopted by Mayor and Members of the Council of the City of Gautier, Mississippi, at the meeting of December 15, 2020.

CITY OF GAUTIER
MEMORANDUM

To: Paula Yancey, City Manager
From: April Stennett, Grants and Projects Director
Date: 12/1/2020
Subject: Authorization to Award Contract to DNA Underground, LLC. for the Old Spanish Trail/Gautier Vancleave Road Sewer Improvements Project (RESTORE), Contingent upon MDEQ Approval

---

REQUEST:
The Grants and Projects Department requests City Council authorization to acknowledge receipt of six bids for the Old Spanish Trail/Gautier Vancleave Road sewer improvements project (RESTORE) and award and execute a contract with the low bidder, DNA Underground, LLC, for the base bid, additive alternate No. 1, and additive alternate No. 2 in an amount not to exceed $1,838,760.00, contingent upon MDEQ approval.

BACKGROUND:
The City of Gautier has been awarded a $2.3 million grant by the Mississippi Department of Environmental Quality as part of the Mississippi Gulf Coast Water Quality Improvement Program. The city will install a new sanitary sewer system consisting of gravity lines, force mains, and a lift station to transport the sewer to the existing wastewater treatment plant. The new lines will be installed along Old Spanish Trail and Gautier Vancleave Road.

DISCUSSION:
On November 19, 2020, six sealed proposals for the Old Spanish Trail/Gautier Vancleave Road sewer improvements project (RESTORE) were received. City staff recommends awarding the base bid, additive alternate 1, and additive alternate 2.

Seymour Engineering reviewed the bids and recommends awarding the contract to DNA Underground.

This project is being funded through MDEQ and local funds, and the contract award will be executed pending MDEQ approval.

RECOMMENDATION:
The Grants and Projects Department recommends that City Council acknowledge receipt of six bids for the Old Spanish Trail/Gautier Vancleave Road sewer improvements project (RESTORE) and award and execute a contract with the low bidder, DNA Underground, LLC, for the base bid, additive alternate No. 1, and additive alternate No. 2 in an amount not to exceed $1,838,760.00, contingent upon MDEQ approval.

The City Council may:
1) Authorize the Award and Execution of the Contract; or
2) Reject all bids and modify the scope of the project; or
3) Reject all bids and re-advertise.

ATTACHMENTS:
1. Certified Bid Tabulation
2. Contract Award Recommendation Letter

SEYMOUR ENGINEERING

OLD SPANISH TRAIL WASTEWATER SYSTEM UPGRADES
CITY OF GAUTIER
PROJECT NO. 18-066.10

CONTRACTOR'S BID TABULATION

Bid Opening: Thursday, November 19, 2020, at 11:00 A.M. Central Time
Location: Gautier City Hall, 3330 Highway 90, Gautier, MS 39553

Contractor Address City, State	Bottom 2 Top Construction, LLC 23272 Hwy 49 Frontage Rd Suite B Saucier, MS 39574				DNA Underground, LLC 16101 S Swan Road Gulfport, MS 39503				Greater Gulf Development 4263 Popps Ferry Road D'Iberville, MS 39540				Lane Construction Co. of MS, Inc. P.O. Box 1437 Ocean Springs, MS 39566-1437				Moran Hauling Inc. 10380 Three Rivers Road Gulfport, MS 39503				SCI, Inc. 13524 Old Highway 67 Biloxi, MS 39532			
Item. No.	**Description**	**Quantity**	**Unit**	**Unit Price**		**Extension**		**Unit Price**		**Extension**		**Unit Price**		**Extension**		**Unit Price**		**Extension**		**Unit Price**		**Extension**	
BASE BID																							
1	Mobilization	1	LS	$	88,465.78	$	88,465.78	$	110,000.00	$	110,000.00	$	121,000.00	$	121,000.00	$	86,000.00	$	86,000.00	$	150,000.00	$	150,000.00	$	131,300.30	$	131,300.30
2	Traffic Control	1	LS	$	4,000.00	$	4,000.00	$	40,000.00	$	40,000.00	$	50,000.00	$	50,000.00	$	175,000.00	$	175,000.00	$	30,000.00	$	30,000.00	$	6,200.00	$	6,200.00
3	Silt Fence	4,350	LF	$	2.00	$	8,700.00	$	2.00	$	8,700.00	$	4.00	$	17,400.00	$	3.00	$	13,050.00	$	3.50	$	15,225.00	$	3.00	$	13,050.00
4	Wattles (20" Diameter)	550	LF	$	3.76	$	2,068.00	$	5.00	$	2,750.00	$	6.00	$	3,300.00	$	14.00	$	7,700.00	$	5.00	$	2,750.00	$	5.00	$	2,750.00
5	Clearing & Grubbing	2	AC	$	8,500.00	$	17,000.00	$	3,500.00	$	7,000.00	$	6,000.00	$	12,000.00	$	7,000.00	$	14,000.00	$	20,000.00	$	40,000.00	$	4,000.00	$	8,000.00
6	Plant Establishment-Hydroseed & Fertilizer	2	AC	$	3,780.00	$	7,560.00	$	4,500.00	$	9,000.00	$	5,000.00	$	10,000.00	$	3,842.00	$	7,684.00	$	3,800.00	$	7,600.00	$	3,000.00	$	6,000.00
7	Dewatering	10	DAYS	$	3,438.00	$	34,380.00	$	1,000.00	$	10,000.00	$	3,500.00	$	35,000.00	$	1,000.00	$	10,000.00	$	5,500.00	$	55,000.00	$	3,700.00	$	37,000.00
8	Select Fill (Class 9)	1060	CY	$	17.35	$	18,391.00	$	12.00	$	12,720.00	$	22.00	$	23,320.00	$	16.50	$	17,490.00	$	12.50	$	13,250.00	$	18.00	$	19,080.00
9	Limestone (610)	305	CY	$	63.67	$	19,419.35	$	80.00	$	24,400.00	$	85.00	$	25,925.00	$	125.00	$	38,125.00	$	96.00	$	29,280.00	$	89.00	$	27,145.00
10	8" PVC Sewer Pipe- SDR 26 (8'-10' Deep)	120	LF	$	25.53	$	3,063.60	$	36.00	$	4,320.00	$	75.00	$	9,000.00	$	48.00	$	5,760.00	$	47.00	$	5,640.00	$	26.70	$	3,204.00
11	21" PVC Sewer Pipe- SDR 26 (6'-8' Deep)	350	LF	$	73.52	$	25,732.00	$	65.00	$	22,750.00	$	75.00	$	26,250.00	$	102.00	$	35,700.00	$	83.00	$	29,050.00	$	70.20	$	24,570.00
12	24" PVC Sewer Pipe- SDR 26 (0'-6' Deep)	365	LF	$	88.00	$	32,120.00	$	75.00	$	27,375.00	$	95.00	$	34,675.00	$	113.00	$	41,245.00	$	94.00	$	34,310.00	$	82.30	$	30,039.50
13	24" PVC Sewer Pipe- SDR 26 (6'-8' Deep)	2,085	LF	$	92.25	$	192,341.25	$	80.00	$	166,800.00	$	95.00	$	198,075.00	$	140.00	$	291,900.00	$	94.00	$	195,990.00	$	82.30	$	171,595.50
14	24" PVC Sewer Pipe- SDR 26 (8'-10' Deep)	1270	LF	$	99.41	$	126,250.70	$	85.00	$	107,950.00	$	95.00	$	120,650.00	$	168.00	$	213,360.00	$	94.00	$	119,380.00	$	91.00	$	115,570.00
15	24" PVC Sewer Pipe- SDR 26 (10'-12' Deep)	80	LF	$	108.75	$	8,700.00	$	90.00	$	7,200.00	$	95.00	$	7,600.00	$	229.00	$	18,320.00	$	103.00	$	8,240.00	$	95.60	$	7,648.00
16	24" PVC SDR 26 Sewer Pipe In Casing	110	LF	$	103.50	$	11,385.00	$	100.00	$	11,000.00	$	180.00	$	19,800.00	$	449.00	$	49,390.00	$	138.00	$	15,180.00	$	91.80	$	10,098.00
17	24" Ductile Iron Sewer Pipe, Creek Crossing (Including Fittings)	60	LF	$	94.69	$	5,681.40	$	275.00	$	16,500.00	$	295.00	$	17,700.00	$	517.00	$	31,020.00	$	219.00	$	13,140.00	$	280.30	$	16,818.00
18	4" PVC Sewer Pipe- SDR 26 (Including Fittings)	340	LF	$	17.82	$	6,058.80	$	20.00	$	6,800.00	$	25.00	$	8,500.00	$	43.00	$	14,620.00	$	43.00	$	14,620.00	$	26.20	$	8,908.00
19	4" Sanitary Sewer Cleanout	2	EA	$	372.08	$	744.16	$	450.00	$	900.00	$	950.00	$	1,900.00	$	477.00	$	954.00	$	500.00	$	1,000.00	$	176.70	$	353.40
20	Tie New Service Line Into Existing Sewer Service (All Sizes)	2	EA	$	704.76	$	1,409.52	$	400.00	$	800.00	$	2,000.00	$	4,000.00	$	434.00	$	868.00	$	2,000.00	$	4,000.00	$	220.10	$	440.20
21	Connect New Service Line Into Existing Sewer Cleanout (All Sizes)	1	EA	$	200.67	$	200.67	$	400.00	$	400.00	$	1,050.00	$	1,050.00	$	123.00	$	123.00	$	500.00	$	500.00	$	143.40	$	143.40
22	4" HDPE Sanitary Sewer Service Line Directional Bore (Including Fittings)	120	LF	$	135.94	$	16,312.80	$	56.00	$	6,720.00	$	70.00	$	8,400.00	$	216.00	$	25,920.00	$	70.00	$	8,400.00	$	63.80	$	7,656.00
23	24"x4" Service Wye	3	EA	$	1,798.84	$	5,396.52	$	2,750.00	$	8,250.00	$	4,200.00	$	12,600.00	$	2,016.00	$	6,048.00	$	2,800.00	$	8,400.00	$	2,662.40	$	7,987.20
24	24"x6" Service Wye	1	EA	$	2,084.90	$	2,084.90	$	3,300.00	$	3,300.00	$	5,000.00	$	5,000.00	$	2,292.00	$	2,292.00	$	3,350.00	$	3,350.00	$	3,064.00	$	3,064.00
25	24"x8" Service Wye	1	EA	$	2,213.62	$	2,213.62	$	3,450.00	$	3,450.00	$	5,100.00	$	5,100.00	$	2,415.00	$	2,415.00	$	3,500.00	$	3,500.00	$	3,243.20	$	3,243.20
26	6" PVC Sewer Pipe- SDR 26 (Including Fittings)	30	LF	$	22.13	$	663.90	$	38.00	$	1,140.00	$	50.00	$	1,500.00	$	59.00	$	1,770.00	$	45.00	$	1,350.00	$	38.00	$	1,140.00
27	6" HDPE Sanitary Sewer Service Line Directional Bore (Including Fittings)	30	LF	$	178.72	$	5,361.60	$	89.00	$	2,670.00	$	250.00	$	7,500.00	$	252.00	$	7,560.00	$	212.00	$	6,360.00	$	190.70	$	5,721.00
28	10" C-900 PVC Sanitary Sewer Force Main (Including Fittings)	710	LF	$	22.72	$	16,131.20	$	35.00	$	24,850.00	$	30.00	$	21,300.00	$	78.00	$	55,380.00	$	57.00	$	40,470.00	$	28.50	$	20,235.00
29	10" HDPE Sanitary Sewer Force Main Directional Bore (Including Fittings)	30	LF	$	211.97	$	6,359.10	$	158.00	$	4,740.00	$	300.00	$	9,000.00	$	364.00	$	10,920.00	$	321.00	$	9,630.00	$	285.10	$	8,553.00
30	12" C-900 PVC Sanitary Sewer Force Main (Including Fittings)	435	LF	$	39.63	$	17,239.05	$	52.00	$	22,620.00	$	55.00	$	23,925.00	$	113.00	$	49,155.00	$	73.00	$	31,755.00	$	37.70	$	16,399.50
31	12" HDPE Sanitary Sewer Force Main Directional Bore (Including Fittings)	30	LF	$	222.50	$	6,675.00	$	198.00	$	5,940.00	$	350.00	$	10,500.00	$	480.00	$	14,400.00	$	424.00	$	12,720.00	$	398.40	$	11,952.00
32	14" C-900 PVC Sanitary Sewer Force Main (Including Fittings)	60	LF	$	52.91	$	3,174.60	$	50.00	$	3,000.00	$	85.00	$	5,100.00	$	209.00	$	12,540.00	$	96.00	$	5,760.00	$	51.90	$	3,114.00
33	Tie Into Existing 14" Sanitary Sewer Force Main (Including Fittings)	1	EA	$	11,293.98	$	11,293.98	$	9,300.00	$	9,300.00	$	14,000.00	$	14,000.00	$	13,500.00	$	13,500.00	$	26,525.00	$	26,525.00	$	15,542.80	$	15,542.80
34	Tie Existing 6" & 10" Force Main with New 12" Force Main (Including Fittings)	1	EA	$	5,023.02	$	5,023.02	$	8,450.00	$	8,450.00	$	13,000.00	$	13,000.00	$	6,080.00	$	6,080.00	$	28,270.00	$	28,270.00	$	6,388.80	$	6,388.80
35	Tie 10" Force Main into Existing 10" Force Main (Including Fittings)	1	EA	$	5,787.28	$	5,787.28	$	3,425.00	$	3,425.00	$	7,500.00	$	7,500.00	$	7,201.00	$	7,201.00	$	16,250.00	$	16,250.00	$	6,680.80	$	6,680.80
36	Lift Station (Including Wet Well, Valve Pit, Control Panel, All Piping, Appurtenances, Shoring & Dewatering)	1	EA	$	279,268.96	$	279,268.96	$	280,650.00	$	280,650.00	$	265,000.00	$	265,000.00	$	361,000.00	$	361,000.00	$	300,000.00	$	300,000.00	$	343,780.00	$	343,780.00

SEYMOUR ENGINEERING

OLD SPANISH TRAIL WASTEWATER SYSTEM UPGRADES
CITY OF GAUTIER
PROJECT NO. 18-066.10

CONTRACTOR'S BID TABULATION

Bid Opening: Thursday, November 19, 2020, at 11:00 A.M. Central Time
Location: Gautier City Hall, 3330 Highway 90, Gautier, MS 39553

Contractor Address City, State	Bottom 2 Top Construction, LLC 23272 Hwy 49 Frontage Rd Suite B Saucier, MS 39574		DNA Underground, LLC 16101 S Swan Road Gulfport, MS 39503		Greater Gulf Development 4263 Popps Ferry Road D'Iberville, MS 39540		Lane Construction Co. of MS, Inc. P.O. Box 1437 Ocean Springs, MS 39566-1437		Moran Hauling Inc. 10380 Three Rivers Road Gulfport, MS 39503		SCI, Inc. 13524 Old Highway 67 Biloxi, MS 39532	
Item. No.	**Description**	**Quantity**	**Unit**	**Unit Price**	**Extension**	**Unit Price**	**Extension**	**Unit Price**	**Extension**	**Unit Price**	**Extension**	**Unit Price**	**Extension**
BASE BID													
37	36" Steel Casing - Jack & Bore	110	LF	$ 605.73	$ 66,630.30	$ 675.00	$ 74,250.00	$ 940.00	$ 103,400.00	$ 930.00	$ 102,300.00	$ 1,302.00	$ 143,220.00	$ 866.40	$ 95,304.00
38	Sewer Manhole (0'-6' Deep)(60" Diameter)	2	EA	$ 4,223.93	$ 8,447.86	$ 5,300.00	$ 10,600.00	$ 3,500.00	$ 7,000.00	$ 6,200.00	$ 12,400.00	$ 5,050.00	$ 10,100.00	$ 4,442.20	$ 8,884.40
39	Sewer Manhole (6'-8' Deep)(60" Diameter)	5	EA	$ 4,938.13	$ 24,690.65	$ 6,700.00	$ 33,500.00	$ 4,000.00	$ 20,000.00	$ 6,200.00	$ 31,000.00	$ 5,050.00	$ 25,250.00	$ 4,958.60	$ 24,793.00
40	Sewer Manhole (8'-10' Deep)(60" Diameter)	5	EA	$ 6,119.19	$ 30,595.95	$ 7,500.00	$ 37,500.00	$ 4,500.00	$ 22,500.00	$ 6,200.00	$ 31,000.00	$ 6,000.00	$ 30,000.00	$ 6,186.50	$ 30,932.50
41	Sewer Doghouse Manhole (10'-12' Deep) (60" Diameter)	3	EA	$ 5,713.92	$ 17,141.76	$ 8,750.00	$ 26,250.00	$ 5,500.00	$ 16,500.00	$ 7,875.00	$ 23,625.00	$ 11,250.00	$ 33,750.00	$ 6,573.60	$ 19,720.80
42	Tie Into Existing Manhole (All Sizes)	3	EA	$ 602.00	$ 1,806.00	$ 2,500.00	$ 7,500.00	$ 3,000.00	$ 9,000.00	$ 4,131.00	$ 12,393.00	$ 3,250.00	$ 9,750.00	$ 600.00	$ 1,800.00
43	Abandon Existing Manhole	10	EA	$ 400.00	$ 4,000.00	$ 300.00	$ 3,000.00	$ 2,000.00	$ 20,000.00	$ 2,824.00	$ 28,240.00	$ 2,500.00	$ 25,000.00	$ 700.00	$ 7,000.00
44	Sawcut Existing Roads & Driveways (All Depths)	660	LF	$ 5.09	$ 3,359.40	$ 7.00	$ 4,620.00	$ 10.00	$ 6,600.00	$ 9.00	$ 5,940.00	$ 6.50	$ 4,290.00	$ 5.00	$ 3,300.00
45	2" Asphalt Surface Course	320	SY	$ 31.80	$ 10,176.00	$ 22.00	$ 7,040.00	$ 40.00	$ 12,800.00	$ 20.00	$ 6,400.00	$ 22.00	$ 7,040.00	$ 16.80	$ 5,376.00
46	4" Asphalt Base Course	320	SY	$ 68.90	$ 22,048.00	$ 44.00	$ 14,080.00	$ 75.00	$ 24,000.00	$ 40.00	$ 12,800.00	$ 41.00	$ 13,120.00	$ 33.50	$ 10,720.00
47	Remove & Replace 15" CPP	110	LF	$ 23.06	$ 2,536.60	$ 50.00	$ 5,500.00	$ 50.00	$ 5,500.00	$ 60.00	$ 6,600.00	$ 44.00	$ 4,840.00	$ 38.30	$ 4,213.00
48	Remove & Replace 36" CPP	130	LF	$ 56.04	$ 7,285.20	$ 70.00	$ 9,100.00	$ 80.00	$ 10,400.00	$ 133.00	$ 17,290.00	$ 78.00	$ 10,140.00	$ 75.90	$ 9,867.00
49	Remove & Replace 48" CPP	60	LF	$ 78.62	$ 4,717.20	$ 90.00	$ 5,400.00	$ 120.00	$ 7,200.00	$ 238.00	$ 14,280.00	$ 123.00	$ 7,380.00	$ 112.20	$ 6,732.00
50	Remove & Replace Rip Rap	200	TON	$ 71.68	$ 14,336.00	$ 80.00	$ 16,000.00	$ 210.00	$ 42,000.00	$ 136.00	$ 27,200.00	$ 100.00	$ 20,000.00	$ 72.00	$ 14,400.00
51	Repair Concrete Headwall	20	CY	$ 1,148.00	$ 22,960.00	$ 300.00	$ 6,000.00	$ 1,100.00	$ 22,000.00	$ 1,846.00	$ 36,920.00	$ 1,450.00	$ 29,000.00	$ 1,200.00	$ 24,000.00
52	Replace 4" Concrete Sidewalk	25	SY	$ 73.90	$ 1,847.50	$ 50.00	$ 1,250.00	$ 185.00	$ 4,625.00	$ 172.00	$ 4,300.00	$ 120.00	$ 3,000.00	$ 60.50	$ 1,512.50
53	Replace 6" Curb & Gutter	24	LF	$ 20.90	$ 501.60	$ 35.00	$ 840.00	$ 150.00	$ 3,600.00	$ 50.00	$ 1,200.00	$ 100.00	$ 2,400.00	$ 18.00	$ 432.00
54	Water Main Adjustment	5	EA	$ 5,278.92	$ 26,394.60	$ 500.00	$ 2,500.00	$ 7,000.00	$ 35,000.00	$ 6,127.00	$ 30,635.00	$ 2,500.00	$ 12,500.00	$ 5,251.20	$ 26,256.00
55	Cap Existing Force Main (All sizes, Including Fittings)	5	EA	$ 3,737.02	$ 18,685.10	$ 800.00	$ 4,000.00	$ 3,500.00	$ 17,500.00	$ 1,033.00	$ 5,165.00	$ 500.00	$ 2,500.00	$ 357.80	$ 1,789.00
56	Plug Existing Gravity Sewer Line (All Sizes)	6	EA	$ 3,559.68	$ 21,358.08	$ 300.00	$ 1,800.00	$ 2,500.00	$ 15,000.00	$ 407.00	$ 2,442.00	$ 500.00	$ 3,000.00	$ 222.10	$ 1,332.60
57	Water Service Line Adjustment	5	EA	$ 173.85	$ 869.25	$ 400.00	$ 2,000.00	$ 1,000.00	$ 5,000.00	$ 423.00	$ 2,115.00	$ 500.00	$ 2,500.00	$ 102.00	$ 510.00
58	Remove & Replace Chain Link Fence	85	LF	$ 53.00	$ 4,505.00	$ 35.00	$ 2,975.00	$ 60.00	$ 5,100.00	$ 28.00	$ 2,380.00	$ 20.00	$ 1,700.00	$ 24.20	$ 2,057.00
	TOTAL BASE BID				**$ 1,311,548.81**		**$ 1,261,575.00**		**$ 1,571,295.00**		**$ 2,065,115.00**		**$ 1,687,375.00**		**$ 1,402,302.40**
ADDITIVE ALTERNATE #1: DE LA FOREST SUBDIVISION															
1	CIPP 8" VCP	6875	LF	$ 35.09	$ 241,243.75	$ 32.00	$ 220,000.00	$ 34.00	$ 233,750.00	$ 31.50	$ 216,562.50	$ 35.00	$ 240,625.00	$ 31.00	$ 213,125.00
2	CIPP 10" VCP	385	LF	$ 61.03	$ 23,496.55	$ 38.00	$ 14,630.00	$ 40.00	$ 15,400.00	$ 37.00	$ 14,245.00	$ 41.00	$ 15,785.00	$ 35.70	$ 13,744.50
3	Line Interior of Manholes	31	EA	$ 1,997.36	$ 61,918.16	$ 1,725.00	$ 53,475.00	$ 2,000.00	$ 62,000.00	$ 1,788.00	$ 55,428.00	$ 1,450.00	$ 44,950.00	$ 1,711.50	$ 53,056.50
4	Point Repairs	2	EA	$ 6,857.12	$ 13,714.24	$ 4,750.00	$ 9,500.00	$ 5,500.00	$ 11,000.00	$ 2,100.00	$ 4,200.00	$ 7,500.00	$ 15,000.00	$ 10,000.00	$ 20,000.00
	TOTAL OF ALL ALTERNATE #1 BID ITEMS				**$ 340,372.70**		**$ 297,605.00**		**$ 322,150.00**		**$ 290,435.50**		**$ 316,360.00**		**$ 299,926.00**
ADDITIVE ALTERNATE #2: SEACLIFFE SUBDIVISION															
1	CIPP 8" VCP	7040	LF	$ 35.47	$ 249,708.80	$ 32.00	$ 225,280.00	$ 36.00	$ 253,440.00	$ 33.00	$ 232,320.00	$ 37.00	$ 260,480.00	$ 31.00	$ 218,240.00
2	Line Interior of Manholes	30	EA	$ 2,104.20	$ 63,126.00	$ 1,325.00	$ 39,750.00	$ 1,600.00	$ 48,000.00	$ 1,387.00	$ 41,610.00	$ 1,150.00	$ 34,500.00	$ 1,326.20	$ 39,786.00
3	Point Repairs	3	EA	$ 5,201.97	$ 15,605.91	$ 4,850.00	$ 14,550.00	$ 5,500.00	$ 16,500.00	$ 2,100.00	$ 6,300.00	$ 7,500.00	$ 22,500.00	$ 10,000.00	$ 30,000.00
	TOTAL OF ALL ALTERNATE #2 BID ITEMS				**$ 328,440.71**		**$ 279,580.00**		**$ 317,940.00**		**$ 280,230.00**		**$ 317,480.00**		**$ 288,026.00**

= Mathematical errors were found in the bid, and the amount shown shows the corrected amount

I HAVE REVIEWED THESE BIDS AND HEREBY CERTIFY THAT THEY ARE ACCURATE

Sarah M Lellan

11/20/2020

SARAH MCLELLAN, E.I.

November 24, 2020

Ms. Paula Yancey
City Manager
City of Gautier
3330 Highway 90
Gautier, MS 39553

Re: Acknowledge Receipt of Bids and Recommendation of Award
Old Spanish Trail Wastewater System Upgrades, Gautier, Mississippi

Dear Ms. Yancey,

Please be advised that on Thursday, November 19, 2020, at 10:00 AM, bids were received for the above referenced project. As you will see from the attached bid tabulation, DNA Underground, LLC is the low bidder. This contractor has a positive reputation and adequate experience and expertise to perform the duties required by the contract documents. Based on this, Seymour Engineering recommends awarding the Contract to DNA Underground, LLC for the Base Bid, Additive Alternate #1, and Additive Alternate #2 in the amount of $1,838,760.00, contingent on MDEQ granting approval.

Should you have any questions or comments, please do not hesitate to call.

Sincerely,

SEYMOUR ENGINEERING

Sarah McLellan, E.I.
Project Engineer

Cc: Ms. April Havens, Grants and Project Administrator

Attachment: Certified Bid Tabulation

Councilman Colledge made the motion to waive the bid irregularity for Moran Hauling's bid on the Martin Bluff Road Sidewalk improvements project, as deemed to be cured and hereby waived as an informality, and that the bid of Moran Hauling will be considered, as presented. Councilman Anderson seconded the motion. The vote was carried unanimously.

There came for consideration of the Mayor and Members of the Council of the City of Gautier, Mississippi, the following:

ORDER NUMBER 497-2020

WHEREAS, the City of Gautier (hereinafter, "the City") has submitted a request for bids relating to the Martin Bluff Road Sidewalk Improvements Project; and

WHEREAS, one bidder, Moran Hauling, inadvertently failed to sign the Disadvantaged Business Enterprise commitment; and

WHEREAS, following the bid opening, Moran Hauling executed the document as requested; and

WHEREAS, the Mississippi Department of Transportation has confirmed that the failure to execute this document is a technicality, and that such a bid irregularity may be waived; and

WHEREAS, Staff requests waiver of this bidding irregularity, and seeks Council consideration of Moran Hauling's bid; and

WHEREAS, the City Council hereby finds that 1) the requested action would not violate any mandatory or statutory provisions, 2) the competitive nature of the bidding process is not destroyed by such a waiver, 3) the waiver has no effect on the bid amount, and 4) the waiver does not give one bidder an advantage or benefit over other bidders; and

WHEREAS, the City Council hereby finds that approval of this request is in the best interests of the City of Gautier;

IT IS THEREFORE ORDERED by the Mayor and Council, that Moran Hauling's failure to sign the Disadvantaged Business Enterprise commitment has been cured and is hereby waived as an informality, and that the bid of Moran Hauling will be considered by the Council.

IT IS FURTHER ORDERED that the City Manager is authorized to execute any and all documents necessary for this purpose.

Motion was made by **Councilman Colledge,** seconded by **Councilman Anderson,** and the following vote was recorded:

AYES: **Phil Torjusen**
Mary Martin
Cameron George
Richard Jackson
Casey Vaughan
Rusty Anderson
Adam Colledge

NAYS: **None**

MAYOR

ATTEST:

CITY CLERK

Passed and Adopted by Mayor and Members of the Council of the City of Gautier, Mississippi, at the meeting of December 15, 2020.

CITY OF GAUTIER
MEMORANDUM

To: Paula Yancey, City Manager

From: April Stennett, Grants and Projects Director

Date: December 3, 2020

Subject: Waiver of Bid Irregularity – Martin Bluff Road Sidewalk Improvements

---

REQUEST:
The Grants and Projects Department requests that City Council waive a minor bid irregularity within the low bidder's package for the Martin Bluff Road Sidewalk Improvements Project (STP-9194-00(002)LPA/108009-701000).

BACKGROUND:
The City was awarded a Transportation Alternatives (TA) grant for a project to construct sidewalks along Martin Bluff Road from the elementary school, north to Little Bend subdivision. This will tie into the Martin Bluff Road widening project.

DISCUSSION:
A minor irregularity was noted in the low bid submitted by Moran Hauling, Inc. for this project. However, this is a waivable irregularity. Moran Hauling inadvertently failed to sign the Disadvantaged Business Enterprise commitment form. The Mississippi Department of Transportation has confirmed that the failure to execute this document is a technicality (due to the DBE goal being 0 percent) and such a bid irregularity may be waived.

RECOMMENDATION:
The Grants and Projects Department recommends that City Council waive a minor bid irregularity within the low bidder's package for the Martin Bluff Road Sidewalk Improvements Project (STP-9194-00(002)LPA/108009-701000).

The City Council may:
1. Waive the minor bid irregularity, as presented; or
2. Not waive the minor bid irregularity.

ATTACHMENT(S):
None

Councilman Vaughan made the motion to acknowledge the receipt of six bids for the Martin Bluff Road Sidewalk Improvements Project (STP-9194-00(002)LPA/108009-701000), as presented, and award the contract to Moran Hauling, Inc. in an amount not to exceed $699,075.75, contingent upon MDOT concurrence. Councilwoman Martin seconded the motion. The vote was carried unanimously.

There came for consideration of the Mayor and Members of the Council of the City of Gautier, Mississippi, the following:

ORDER NUMBER 498-2020

WHEREAS, the City of Gautier requested bids for the Martin Bluff Road Sidewalk Improvements Project (STP-9194-00(002)LPA/108009-701000) to provide improved traffic operations and safety on Martin Bluff Road; and

WHEREAS, on November 24, 2020, bids were received and opened; and

WHEREAS, the low bidder was Moran Hauling, Inc. in the amount not to exceed $699,075.75; and

WHEREAS, the proper proposal documentation, including bid bond, is in order as required by the contract documents; and

WHEREAS, this project is being funded through a Transportation Alternatives grant; and

WHEREAS, this is an 80/20 grant, having City responsible for Preliminary Engineering costs and at least 20% of the total project cost (with Jackson County providing funds to assists with the City's local match); and

WHEREAS, Michael Baker International reviewed the bids and recommends awarding the contract to Moran Hauling, Inc., as the lowest and best bid; and

WHEREAS, the Mayor and Members of Council find that it is in the best interests of the City to award and approve the contract with the lowest and best bidder, Moran Hauling, Inc., in an amount not to exceed $699,075.75; and

WHEREAS, the Mayor and Council Members hereby find that Moran Hauling, Inc. has submitted the lowest and best bid; and

IT IS HEREBY ORDERED by the Mayor and Members of the Council of the City of Gautier, Mississippi, that the award and execution of the contract with Moran Hauling, Inc., for the Martin Bluff Road Sidewalk Improvements Project (STP-9194-00(002)LPA/108009-701000) is hereby authorized and approved.

IT IS FURTHER ORDERED that the City Manager or City Clerk is authorized to execute any and all documents necessary for this purpose.

Motion was made by **Councilman Vaughan,** seconded by **Councilwoman Martin,** and the following vote was recorded:

AYES: **Phil Torjusen**
Mary Martin
Cameron George
Richard Jackson
Casey Vaughan
Rusty Anderson
Adam Colledge

NAYS: **None**

MAYOR

ATTEST:

CITY CLERK

Passed and Adopted by Mayor and Members of the Council of the City of Gautier, Mississippi, at the meeting of December 15, 2020.

CITY OF GAUTIER
MEMORANDUM

To: Paula Yancey, City Manager
From: April Stennett, Grants and Projects Director
Date: 12/3/2020
Subject: Authorization to Acknowledge Bids and Award Contract for the Martin Bluff Road Sidewalk Improvements Project (STP-9194-00(002)LPA/108009-701000)

REQUEST:
The Grants and Projects Department requests that City Council acknowledge receipt of six bids for the Martin Bluff Road Sidewalk Improvements Project (STP-9194-00(002)LPA/108009-701000) and award a contract to the low bidder, Moran Hauling, Inc. in an amount not to exceed $699,075.75, contingent upon MDOT concurrence.

BACKGROUND:
The City was awarded a Transportation Alternatives (TA) grant for a project to construct sidewalks along Martin Bluff Road from the elementary school, north to Little Bend subdivision. This would tie into the Martin Bluff Road widening project.

This is an 80/20 grant. The City is responsible for all Preliminary Engineering costs and at least 20% of the total project cost. Jackson County has provided funds to assist with the City's local match.

TA projects are eligible for funding under the Surface Transportation Block Grant (STBG) program. The FAST Act eliminates the MAP-21 Transportation Alternative Program (TAP) and replaces it with a set-aside of STBG program funding for TA projects. These set aside funds include all projects and activities that were previously eligible under TAP, encompassing a variety of smaller-scale transportation projects such as pedestrian and bicycle facilities, recreational trails, safe routes to school projects, community improvements such as historic preservation and vegetation management and environmental mitigation related to stormwater and habitat connectivity.

DISCUSSION:
Six bids for this project were received and opened Nov. 24, 2020. Michael Baker International performed a complete review of the bids, and a minor irregularity was noted in the low bid submitted by Moran Hauling, Inc. However, this is a waivable irregularity.

Michael Baker International recommends awarding the project to Moran Hauling, Inc., in the amount of $699,075.75.

RECOMMENDATION:
The Grants and Projects Department recommends that City Council acknowledge receipt of six bids for the Martin Bluff Road Sidewalk Improvements Project (STP-9194-00(002)LPA/108009-701000) and award a contract to the low bidder, Moran Hauling, Inc. in an amount not to exceed $699,075.75, contingent upon MDOT concurrence.

The City Council may:
1) Acknowledge the bids and award a contract to the low bidder, contingent upon MDOT concurrence, as presented; or
2) Not acknowledge the bids and not award a contract to the low bidder as presented.

ATTACHMENTS:

1. Recommendation of Award and Bid Tabulation

December 2, 2020

Ms. April Stennett – Grants and Projects Director
City of Gautier
3330 Highway 90
Gautier, MS 39553

Re: **Martin Bluff Road Sidewalk Project**
STP-9194-00(002)LPA / 108009-701000
Jackson County, MS

Dear Ms. Stennett,

Bids for the referenced project were received on Tuesday, November 24th, 2020 and subsequently publicly opened and read aloud. A total of six bids were received and read as aloud:

1.	Moran Hauling, Inc.	-	$699,075.75
2.	JE Talley Construction Inc.	-	$734,399.75
3.	DNA Underground	-	$767,802.00
4.	DCD Construction, Inc.	-	$775,416.75
5.	Lane Construction Co.	-	$814,038.00
6.	Twin L Construction, Inc.	-	$868,141.95

A complete review of the documents received from each of the bidders was performed and a detailed tabulation of the bids was prepared. A minor irregularity was noted in the bid submitted by Moran Hauling, Inc., however, the City of Gautier reserves the right, for any reason, to waive technicalities and irregularities.

Therefore, based on our review, Michael Baker International recommends awarding the project to Moran Hauling, Inc., in the amount of $699,075.75.

Should you have any questions or require any additional information, please do not hesitate to contact me at (228) 818-2839.

Respectfully,

Jeffrey D. May, P.E.
Project Manager

Enclosure: Certified Bid Tabulation

Michael Baker INTERNATIONAL

BID TABULATION 11/24/2020
City of Gautier-Martin Bluff Road Sidewalk Improvements
STP-9194-00(002)LPA-108009/701000

PAY ITEM	DESCRIPTION	UNIT	ESTIMATED QUANTITY	Engineer's Estimate UNIT COST	Engineer's Estimate EXTENSION	Moran Hauling, Inc UNIT COST	Moran Hauling, Inc EXTENSION	JE Talley Construction, Inc. UNIT COST	JE Talley Construction, Inc. EXTENSION	DNA Underground UNIT COST	DNA Underground EXTENSION	DCD Construction UNIT COST	DCD Construction EXTENSION	Lane Construction Co. UNIT COST	Lane Construction Co. EXTENSION	Twin L Construction, Inc. UNIT COST	Twin L Construction, Inc. EXTENSION
	EARTHWORK ITEMS																
201-B001	CLEARING AND GRUBBING	ACRE	3.00	$3,500.00	$10,500.00	$2,000.00	$6,000.00	$5,445.00	$16,335.00	$3,000.00	$9,000.00	$8,270.25	$24,810.75	$5,550.00	$16,650.00	$9,530.00	$28,590.00
202-A001	REMOVAL OF OBSTRUCTIONS	LS	1.00	$10,000.00	$10,000.00	$5,000.00	$5,000.00	$18,150.00	$18,150.00	$5,000.00	$5,000.00	$9,930.00	$9,930.00	$4,625.00	$4,625.00	$3,811.50	$3,811.50
202-B092	REMOVAL OF CONCRETE CURB, ALL TYPES	LF	50	$5.00	$250.00	$10.00	$500.00	$24.20	$1,210.00	$10.00	$500.00	$3.50	$175.00	$11.00	$550.00	$5.10	$255.00
202-B164	REMOVAL OF INLET AND JUNCTION BOX, ALL TYPES & SIZES	EA	2	$750.00	$1,500.00	$1,000.00	$2,000.00	$1,815.00	$3,630.00	$350.00	$700.00	$294.75	$589.50	$240.00	$480.00	$508.00	$1,016.00
202-B191	REMOVAL OF PIPE, 8" & ABOVE	LF	80	$12.00	$960.00	$9.00	$720.00	$18.15	$1,452.00	$10.00	$800.00	$4.75	$380.00	$12.00	$960.00	$8.25	$660.00
203-A001	UNCLASSIFIED EXCAVATION, FM, AH	CY	1,800	$5.00	$9,000.00	$7.00	$12,600.00	$12.10	$21,780.00	$8.00	$14,400.00	$18.25	$32,850.00	$8.00	$14,400.00	$12.70	$22,860.00
203- EX014	BORROW EXCAVATION, AH, FME, CLASS B5	CY	2,200	$10.00	$22,000.00	$15.00	$33,000.00	$16.94	$37,268.00	$12.00	$26,400.00	$23.50	$51,700.00	$15.00	$33,000.00	$19.00	$41,800.00
203-I002	SITE GRADING	SY	13,500	$5.00	$67,500.00	$1.25	$16,875.00	$3.33	$44,955.00	$1.00	$13,500.00	$3.25	$43,875.00	$2.50	$33,750.00	$3.20	$43,200.00
				SUBTOTAL	**$121,710.00**		**$76,695.00**	**SUBTOTAL**	**$144,780.00**		**$70,300.00**	**SUBTOTAL**	**$164,310.25**	**SUBTOTAL**	**$104,415.00**	**SUBTOTAL**	**$142,192.50**
	ROADSIDE DEVELOPMENT ITEMS																
211-B001	TOPSOIL FOR SLOPE TREATMENT, CONTRACTOR FURNISHED	CY	1,850	$7.00	$12,950.00	$20.00	$37,000.00	$21.78	$40,293.00	$20.00	$37,000.00	$40.50	$74,925.00	$19.50	$36,075.00	$25.40	$46,990.00
216-B002	SOLID SODDING, CENTIPEDE	SY	4,000	$5.00	$20,000.00	$6.00	$24,000.00	$4.84	$19,360.00	$6.00	$24,000.00	$4.75	$19,000.00	$5.00	$20,000.00	$8.25	$33,000.00
219-A001	WATERING	KGAL	200	$20.00	$4,000.00	$20.00	$4,000.00	$20.00	$4,000.00	$20.00	$4,000.00	$20.00	$4,000.00	$20.00	$4,000.00	$20.00	$4,000.00
225-A001	GRASSING	ACRE	4	$1,500.00	$6,000.00	$3,000.00	$12,000.00	$1,815.00	$7,260.00	$1,000.00	$4,000.00	$3,771.75	$15,087.00	$4,255.00	$17,020.00	$3,049.20	$12,196.80
225-C001	MULCH, VEGETATIVE MULCH	TON	6	$200.00	$1,200.00	$300.00	$1,800.00	$1,210.00	$7,260.00	$1,000.00	$6,000.00	$943.00	$5,658.00	$522.00	$3,132.00	$1,525.00	$9,150.00
226-A001	TEMPORARY GRASSING	ACRE	4	$1,500.00	$6,000.00	$2,400.00	$9,600.00	$1,210.00	$4,840.00	$1,000.00	$4,000.00	$3,771.75	$15,087.00	$4,254.00	$17,016.00	$2,287.00	$9,148.00
234-A001	TEMPORARY SILT FENCE	LF	12,200	$3.50	$42,700.00	$3.50	$42,700.00	$3.63	$44,286.00	$2.00	$24,400.00	$2.25	$27,450.00	$3.50	$42,700.00	$4.75	$57,950.00
237-A001	WATTLES, 12"	LF	1,000	$5.00	$5,000.00	$2.00	$2,000.00	$9.68	$9,680.00	$4.00	$4,000.00	$2.25	$2,250.00	$5.00	$5,000.00	$12.70	$12,700.00
				SUBTOTAL	**$97,850.00**		**$133,100.00**	**SUBTOTAL**	**$136,979.00**	**SUBTOTAL**	**$107,400.00**	**SUBTOTAL**	**$163,457.00**	**SUBTOTAL**	**$144,943.00**	**SUBTOTAL**	**$185,134.80**
	BITUMINOUS PAVING ITEMS																
403-A003	12.5-MM, ST, ASPHALT PAVEMENT	TON	10	$155.00	$1,550.00	$300.00	$3,000.00	$302.50	$3,025.00	$300.00	$3,000.00	$324.25	$3,242.50	$220.00	$2,200.00	$318.00	$3,180.00
				SUBTOTAL	**$1,550.00**		**$3,000.00**	**SUBTOTAL**	**$3,025.00**	**SUBTOTAL**	**$3,000.00**	**SUBTOTAL**	**$3,242.50**	**SUBTOTAL**	**$2,200.00**	**SUBTOTAL**	**$3,180.00**
	DRAINAGE ITEMS																
601-B001	CLASS "B" STRUCTURAL CONCRETE, MINOR STRUCTURES	CY	9	$1,500.00	$13,500.00	$1,300.00	$11,700.00	$1,815.00	$16,335.00	$1,400.00	$12,600.00	$444.50	$4,000.50	$2,012.00	$18,108.00	$1,270.50	$11,434.50
602-A001	REINFORCING STEEL	LBS	750	$3.00	$2,250.00	$3.00	$2,250.00	$2.42	$1,815.00	$3.00	$2,250.00	$1.50	$1,125.00	$2.50	$1,875.00	$3.80	$2,850.00
603-CA011	18" REINFORCED CONCRETE PIPE, CLASS III	LF	224	$45.00	$10,080.00	$40.00	$8,960.00	$42.35	$9,486.40	$70.00	$15,680.00	$66.75	$14,952.00	$115.00	$25,760.00	$44.50	$9,968.00
603-CA026	24" REINFORCED CONCRETE PIPE, CLASS III	LF	40	$50.00	$2,000.00	$60.00	$2,400.00	$66.55	$2,662.00	$90.00	$3,600.00	$138.75	$5,550.00	$154.00	$6,160.00	$88.95	$3,558.00
604-B001	GRATINGS	LBS	314	$3.00	$942.00	$7.25	$2,276.50	$6.05	$1,899.70	$3.00	$942.00	$2.25	$706.50	$4.00	$1,256.00	$6.35	$1,993.90
				SUBTOTAL	**$28,772.00**	**SUBTOTAL**	**$27,586.50**	**SUBTOTAL**	**$32,198.10**	**SUBTOTAL**	**$35,072.00**	**SUBTOTAL**	**$26,334.00**	**SUBTOTAL**	**$53,159.00**	**SUBTOTAL**	**$29,804.40**
	INCIDENTAL CONSTRUCTION ITEMS																
608-A001	CONCRETE SIDEWALK, WITHOUT REINFORCEMENT	SY	6,710	$55.00	$369,050.00	$47.00	$315,370.00	$50.82	$341,002.20	$53.00	$355,630.00	$42.75	$286,852.50	$45.00	$301,950.00	$61.00	$409,310.00
907-608-C001	DETECTABLE WARNING PANELS	SF	200	$32.00	$6,400.00	$35.00	$7,000.00	$30.25	$6,050.00	$80.00	$16,000.00	$11.75	$2,350.00	$46.00	$9,200.00	$19.05	$3,810.00
609-B005	CONCRETE CURB, SPECIAL DESIGN HEADER	LF	90	$35.00	$3,150.00	$48.00	$4,320.00	$36.30	$3,267.00	$55.00	$4,950.00	$34.25	$3,082.50	$95.00	$8,550.00	$44.50	$4,005.00
613-A001	ADJUSTMENT OF CASTINGS, GRATINGS, AND UTILITY APPURTENANCES	LS	1	$5,000.00	$5,000.00	$3,500.00	$3,500.00	$3,630.00	$3,630.00	$10,000.00	$10,000.00	$3,677.25	$3,677.25	$4,000.00	$4,000.00	$6,352.50	$6,352.50
614-A003	CONCRETE DRIVEWAY, WITHOUT REINFORCEMENT, 6-INCH THICKNESS	SY	635	$85.00	$53,975.00	$73.75	$46,831.25	$60.50	$38,417.50	$68.00	$43,180.00	$54.25	$34,448.75	$68.00	$43,180.00	$86.40	$54,864.00
618-A001	MAINTENANCE OF TRAFFIC	LS	1	$50,000.00	$50,000.00	$25,000.00	$25,000.00	$9,075.00	$9,075.00	$30,000.00	$30,000.00	$64,471.50	$64,471.50	$101,000.00	$101,000.00	$15,246.00	$15,246.00
618-B001	ADDITIONAL CONSTRUCTION SIGNS	SF	1	$10.00	$10.00	$10.00	$10.00	$10.00	$10.00	$10.00	$10.00	$10.00	$10.00	$10.00	$10.00	$10.00	$10.00
620-A001	MOBILIZATION	LS	1	$60,000.00	$60,000.00	$50,000.00	$50,000.00	$9,075.00	$9,075.00	$83,000.00	$83,000.00	$19,058.50	$19,058.50	$37,000.00	$37,000.00	$10,164.00	$10,164.00
				SUBTOTAL	**$547,585.00**	**SUBTOTAL**	**$452,031.25**	**SUBTOTAL**	**$410,526.70**	**SUBTOTAL**	**$542,770.00**	**SUBTOTAL**	**$413,951.00**	**SUBTOTAL**	**$504,890.00**	**SUBTOTAL**	**$503,761.50**
	PAVEMENT MARKING AND SIGNING ITEMS																
626-H004	THERMOPLASTIC LEGEND, WHITE	SF	48	$5.50	$264.00	$20.00	$960.00	$12.10	$580.80	$40.00	$1,920.00	$11.75	$564.00	$11.00	$528.00	$13.20	$633.60
626-H005	THERMOPLASTIC LEGEND, WHITE	LF	528	$2.50	$1,320.00	$6.00	$3,168.00	$6.05	$3,194.40	$10.00	$5,280.00	$3.50	$1,848.00	$3.50	$1,848.00	$3.80	$2,006.40
630-A001	STANDARD ROADSIDE SIGNS, SHEET ALUMINUM, 0.080" THICKNESS	SF	19	$20.00	$380.00	$65.00	$1,235.00	$60.50	$1,149.50	$40.00	$760.00	$41.25	$783.75	$50.00	$950.00	$31.75	$603.25
630-C003	STEEL U-SECTION POSTS, 3.0 LB/FT	LF	65	$8.50	$552.50	$20.00	$1,300.00	$30.25	$1,966.25	$20.00	$1,300.00	$14.25	$926.25	$17.00	$1,105.00	$12.70	$825.50
				SUBTOTAL	**$2,516.50**	**SUBTOTAL**	**$6,663.00**	**SUBTOTAL**	**$6,890.95**	**SUBTOTAL**	**$9,260.00**	**SUBTOTAL**	**$4,122.00**	**SUBTOTAL**	**$4,431.00**	**SUBTOTAL**	**$4,068.75**
				SUTOTAL EARTHWORK ITEMS	$121,710.00		$76,695.00		$144,780.00		$70,300.00		$164,310.25		$104,415.00		$142,192.50
				SUTOTAL ROADSIDE DEVELOPMENT ITEMS	$97,850.00		$133,100.00		$136,979.00		$107,400.00		$163,457.00		$144,943.00		$185,134.80
				SUTOTAL BITUMINOUS PAVING ITEMS	$1,550.00		$3,000.00		$3,025.00		$3,000.00		$3,242.50		$2,200.00		$3,180.00
				SUTOTAL DRAINAGE ITEMS	$28,772.00		$27,586.50		$32,198.10		$35,072.00		$26,334.00		$53,159.00		$29,804.40
				SUTOTAL INCIDENTAL CONSTRUCTION ITEMS	$547,585.00		$452,031.25		$410,526.70		$542,770.00		$413,951.00		$504,890.00		$503,761.50
				SUTOTAL PAVEMENT MARKING AND SIGNING ITEMS	$2,516.50		$6,663.00		$6,890.95		$9,260.00		$4,122.00		$4,431.00		$4,068.75
				TOTAL BID	**$799,983.50**		**$699,075.75**		**$734,399.75**		**$767,802.00**		**$775,416.75**		**$814,038.00**		**$868,141.95**
						% Difference	-13%		-8%		-4%		-3%		2%		9%

JEFFREY D. MAY
REGISTERED PROFESSIONAL
12/2/20
ENGINEER
15572
STATE OF MISSISSIPPI

I certify that this is a correct tabulation of the bids received.

Last Updated: 12/2/2020

Councilman Vaughan made the motion to accept the Planning Commission's recommendation, as presented, and to approve a four-foot (4') variance to side yard set-back requirements for an accessory building in an R-1 Low Density Single-Family Residential Zoning District (GPC #20-23-VAR) (PID# 87110327.000) at 1706 Beth Circle, Gautier MS, finding that that all criteria under Section 4.18.4 of the Unified Development Ordinance have been met based on the evidence in the record, and finding that the variance will not alter the character of the neighborhood. Councilwoman Martin seconded the motion. The vote was carried unanimously.

There came for consideration of the Mayor and Members of the Council of the City of Gautier, Mississippi, the following:

ORDER NUMBER 499-2020

WHEREAS, the homeowner of 1706 Beth Circle, (PID# 87110327.000) has requested a variance to allow a four-foot (4') side yard set-back that would allow an accessory structure to be located on the side of the principal use in an R-1 Low Density Single-Family Residential Zoning District; and

WHEREAS, the property is zoned R-1 Low Density Single-Family Residential, and the accessory structure is currently located six feet (6') from the side property line (the required setback is ten feet (10')); and

WHEREAS, the property owner requests a variance to the minimum side yard setbacks from ten feet (10') to six feet (6') to allow a storage shed that was built without a permit and does not meet side yard minimum requirements for an accessory building; and

WHEREAS, the Mayor and Councilmembers hereby find that all criteria under Section 4.18.4 of the Unified Development Ordinance have been met in this case;

IT IS HEREBY ORDERED by the Mayor and Members of the Council of the City of Gautier, Mississippi, that the City Council hereby adopts the Gautier Planning Commission's recommendation to approve this variance;

IT IS FURTHER ORDERED that the City Manager or City Clerk is authorized to execute any and all documents necessary for this purpose.

Motion was made by **Councilman Vaughan**, seconded by **Councilwoman Martin** and the following vote was recorded:

AYES: **Phil Torjusen**
Mary Martin
Cameron George
Richard Jackson
Casey Vaughan
Rusty Anderson
Adam Colledge

NAYS: **None**

_____
MAYOR

ATTEST:

_____

CITY CLERK

Passed and Adopted by Mayor and Members of the Council of the City of Gautier, Mississippi, at the meeting of December 15, 2020.

CITY OF GAUTIER
MEMORANDUM

To: Paula Yancey, City Manager
From: Babs Logan, Planning Technician
Date: 12/4/2020
Subject: Consider a request for a four foot (4') variance to side yard set-back requirements for an accessory building in a R-1 Low Density Single-Family Residential Zoning District. 1706 Beth Circle, (GPC #20-23-VAR)

REQUEST:
The Planning Department has received a request from David Fulton for a four foot (4') variance to side yard set-back requirements for an accessory building in a R-1 Low Density Single-Family Residential Zoning District. 1706 Beth Circle, PID #87110327.000. The application fee of $175 was paid on October 15, 2020. All public notice requirements have been met.

BACKGROUND:
The request property is zoned R-1 Low Density Single-Family Residential. The property owner has added an accessory building to the side of his residence without obtaining the proper permit. The accessory building is located six feet (6') from the side property line. The required side setback is ten feet (10'). The applicant is seeking a Variance of four feet (4') to minimum side yard setback requirements.

DISCUSSION:
The property owner requests a variance to the minimum side yard setbacks in a R-1 Low Density Single-Family Residential District from ten feet (10') to six feet (6') to allow a storage shed that was built without a permit and does not meet side yard minimum requirements for an accessory building.

DETERMINATION OF APPLICABLE LAW:

The Unified Development Ordinance (UDO) defines Variances as:
A Variance is a relaxation of the terms of the Unified Development Ordinance where such Variance will not be contrary to the public interest and where, owing to conditions peculiar to the property, a literal enforcement of the Ordinance would result in an unnecessary or undue hardship. As used in this Ordinance, a Variance is authorized only for height, area and size of structure, or size of yards, separation of uses, open spaces, off-street parking spaces and some subdivision of property. The establishment or expansion of a use not permitted shall not be allowed by Variance.

The UDO defines Hardship as:

Hardship means the unnecessary hardship that would result from a failure to grant the requested variance or special exception. An unnecessary hardship exists if:
(1) the land in question cannot yield a reasonable return if used only
(a) for a purpose allowed in that zone (applicable to special exceptions), or
(b) as permitted by the dimensional requirements of this ordinance (applicable to variances);
(2) that the plight of the owner is due to unique circumstances of the land for which the variance or special exception is sought; and
(3) that the use to be authorized by the variance will not alter the essential character of the locality.

The UDO defines Setback as:

Setback: (See Yard) The minimum horizontal distance between the lot or property line and the nearest front, side or rear line of the building as measured to the outside face at the enclosing wall or in structures lacking walls (as in the case of a carport) to the face of the supporting columns and beams. Setback does not include roof overhangs, except that they shall not encroach on more than fifty (50) percent of the required setback.

SETBACK, FRONT: The yard area extending along the full width of a front lot line between side lot lines and from the front lot line to the front building line in depth.

SETBACK, REAR: The yard area extending across the full width of the lot and lying between the rear lot line and the nearest line of the building. Rear-yard depth shall be measured at right angles to the rear line of the lot.

SETBACK, SIDE: The yard area lying between the side line of the lot and the nearest line of the building and extending from the front yard to the rear yard, or in the absence of a front yard or a rear yard, to the front or rear lot lines. Side-yard width shall be measured at right angles to side lines of the lot.

UDO SECTION 4.18: Variance

In certain circumstances, a Variance from the dimensional requirements (i.e. height, setbacks, square footage) of this ordinance may be granted if the applicant can prove that because of physical constraints of the property involved, he is not able to build the same type of structure that other persons with the same zoning classification can build. Variances for uses permitted will not be considered in as much as “use Variances” are not legal in the State of Mississippi.

Most Variances must be granted by the City Council; however, certain minor Variances may be granted by the Economic Development Director in accordance with Section 4.18.3 below.

4.18.1 Who May Initiate

A request for a Variance may be initiated by the property owner or agent of the owner provided that said property has not been denied a previous request for a Variance for the same property or portion of property within the past twelve (12) months.

4.18.2 Application for Variance

Applications for a Variance (from dimensional requirements) may be filed on the appropriate application available from the Economic Development/Planning Department and shall include all requested information, attachments and submittals:

4.18.3 Administrative Variances

The following dimensional variances may be granted by the Economic Development Director at his/her discretion (Note: Within the COR, Corridor Overlay District, applicants shall be required to mitigate a requested dimensional variance in accordance with the Tier Land Use Provisions in Section 5.11):

30% of required off-street parking spaces and/or

30% of required setbacks from property lines

4.18.4 Criteria for Approval

The Variance application shall demonstrate the following:

That special conditions and circumstances exist which are peculiar to this particular site (lot or parcel), structure or building involved and which are not applicable to other sites (lots or parcels) or structures or buildings in the same district;

That literal interpretation of the provisions of this Ordinance would deprive the applicant of rights commonly enjoyed by other properties in the same district under the provisions of this Ordinance;

That the special conditions and circumstances do not result from actions of the applicant; and

That granting the Variance requested will not confer upon the applicant any special privilege that is denied by this Ordinance to other similar sites (lots or parcels) structures or buildings in the same district.

RECOMMENDATION:

The Planning Commission recommends Council approve the request in that it would not alter the character of the neighborhood.

The City Council may:

Approve the variance request as presented;
Approve the variance request with changes; or
Deny variance request.

ATTACHMENTS:

1. GPC Complete Packet 20-23-VAR
2. Excerpt GPC Meeting 12.3.20 (GPC 20-23-VAR)

Gautier Planning Commission

Regular Meeting Agenda

December 3, 2020

GPC #20-23-VAR

1706 Beth Circle

VII. NEW BUSINESS

1. CONSIDER A REQUEST FOR A FOUR FOOT (4') VARIANCE TO SIDE YARD SET-BACK REQUIREMENTS FOR AN ACCESSORY BUILDING IN A R-1 LOW DENSITY SINGLE-FAMILY RESIDENTIAL ZONING DISTRICT. 1706 BETH CIRCLE, (GPC #20-23-VAR)

GAUTIER PUBLIC HEARING PROCESS (PLANNING COMMISSION)

Planning Commission Chairman to follow procedure below. All questions/comments to be directed to the Council and not to applicant, staff, or other attendees of the meeting.

1. Chairman announces the case.

2. Chairman makes statement, "This is a Public Hearing and all statements to be made need to be true and accurate for the record."

3. Staff gives brief overview of case.

4. Applicant presents their case.

5. Anyone to speak in support of the Request? Please state your name and address for the record.

6. Anyone to speak in opposition of the Request? Please state your name and address for the record.

7. Any final comments from the applicant?

8. Questions from Commission?

9. Chairman closes public hearing – "This closes the Public Hearing portion of this case" bang of gavel

10. Motion/Deliberation/Vote

CITY OF GAUTIER
STAFF REPORT

To: Chairman and Members, Planning Commission

From: Scott Ankerson, Planning Director

Date: November 17, 2020

Subject: Consider a request for a four foot (4') variance to side yard set-back requirements for an accessory building in a R-1 Low Density Single-Family Residential Zoning District. 1706 Beth Circle, (GPC #20-23-VAR)

REQUEST:

The Planning Department has received a request from David Fulton for a four foot (4') variance to side yard set-back requirements for an accessory building in a R-1 Low Density Single-Family Residential Zoning District. 1706 Beth Circle, PID #87110327.000. The application fee of $175 was paid on October 15, 2020. All public notice requirements have been met.

BACKGROUND:

The request property is zoned R-1 Low Density Single-Family Residential. The property owner has added an accessory building to the side of his residence without obtaining the proper permit. The accessory building is located six feet (6') from the side property line. The required side setback is ten feet (10'). The applicant is seeking a Variance of four feet (4') to minimum side yard setback requirements.

DISCUSSION:

The property owner requests a variance to the minimum side yard setbacks in a R-1 Low Density Single-Family Residential District from ten feet (10') to six feet (6') to allow a storage shed that was built without a permit and does not meet side yard minimum requirements for an accessory building.

DETERMINATION OF APPLICABLE LAW:

The Unified Development Ordinance (UDO) defines **Variances** as:

> A Variance is a relaxation of the terms of the Unified Development Ordinance where such Variance will not be contrary to the public interest and where, owing to conditions peculiar to the property, a literal enforcement of the Ordinance would result in an unnecessary or undue hardship. As used in this Ordinance, a Variance is authorized only for height, area and size of structure, or size of yards,

separation of uses, open spaces, off-street parking spaces and some subdivision of property. The establishment or expansion of a use not permitted shall not be allowed by Variance.

The UDO defines **Hardship** as:

Hardship means the unnecessary hardship that would result from a failure to grant the requested variance or special exception. An unnecessary hardship exists if:
(1) the land in question cannot yield a reasonable return if used only
(a) for a purpose allowed in that zone (applicable to special exceptions), or
(b) as permitted by the dimensional requirements of this ordinance (applicable to variances);
(2) that the plight of the owner is due to unique circumstances of the land for which the variance or special exception is sought; and
(3) that the use to be authorized by the variance will not alter the essential character of the locality.

The UDO defines **Setback** as:

SETBACK: (SEE YARD*)* The minimum horizontal distance between the lot or property line and the nearest front, side or rear line of the building as measured to the outside face at the enclosing wall or in structures lacking walls (as in the case of a carport) to the face of the supporting columns and beams. Setback does not include roof overhangs, except that they shall not encroach on more than fifty (50) percent of the required setback.

A. **SETBACK, FRONT:** The yard area extending along the full width of a front lot line between side lot lines and from the front lot line to the front building line in depth.

B. **SETBACK, REAR:** The yard area extending across the full width of the lot and lying between the rear lot line and the nearest line of the building. Rear-yard depth shall be measured at right angles to the rear line of the lot.

C. **SETBACK, SIDE:** The yard area lying between the side line of the lot and the nearest line of the building and extending from the front yard to the rear yard, or in the absence of a front yard or a rear yard, to the front or rear lot lines. Side-yard width shall be measured at right angles to side lines of the lot.

UDO SECTION 4.18: Variance

In certain circumstances, a Variance from the dimensional requirements (i.e. height, setbacks, square footage) of this ordinance may be granted if the applicant can prove that because of physical constraints of the property involved, he is not able to build the same type of structure that other persons with the same zoning classification can build. Variances for uses permitted will not be considered in as much as "use Variances" are not legal in the State of Mississippi.

Most Variances must be granted by the City Council; however, certain minor Variances may be granted by the Economic Development Director in accordance with *Section 4.18.3* below.

4.18.1 Who May Initiate

A request for a Variance may be initiated by the property owner or agent of the owner provided that said property has not been denied a previous request for a Variance for the same property or portion of property within the past twelve (12) months.

4.18.2 Application for Variance

Applications for a Variance (from dimensional requirements) may be filed on the appropriate application available from the Economic Development/Planning Department and shall include all requested information, attachments and submittals:

4.18.3 Administrative Variances

The following dimensional variances may be granted by the Economic Development Director at his/her discretion (Note: Within the COR, Corridor Overlay District, applicants shall be required to mitigate a requested dimensional variance in accordance with the Tier Land Use Provisions in Section 5.11):

A. 30% of required off-street parking spaces and/or

B. 30% of required setbacks from property lines

4.18.4 Criteria for Approval

The Variance application shall demonstrate the following:

A. That special conditions and circumstances exist which are peculiar to this particular site (lot or parcel), structure or building involved and which are not applicable to other sites (lots or parcels) or structures or buildings in the same district;

B. That literal interpretation of the provisions of this Ordinance would deprive the applicant of rights commonly enjoyed by other properties in the same district under the provisions of this Ordinance;

C. That the special conditions and circumstances do not result from actions of the applicant; and

D. That granting the Variance requested will not confer upon the applicant any special privilege that is denied by this Ordinance to other similar sites (lots or parcels) structures or buildings in the same district.

RECOMMENDATION & CONCLUSION:

Staff has been presented with no evidence or information indicating that the variance criteria listed in UDO Article IV Section 4.18.4 A through D have been met. If recommending approval, Planning Commission shall record a "Finding of Fact" regarding the "Criteria for Approval" from the UDO as listed above.

The Planning Commission may:

1. Recommend that City Council approve variance request as presented;
2. Recommend that City Council approve the variance request with changes; or
3. Recommend that City Council deny variance request.

ATTACHMENTS:

1. Applicant's Exhibit 1 – Application
2. City's Exhibit A – Location Map
3. City's Exhibit B – Existing Zoning Map
4. City's Exhibit C – Existing Land Use Map
5. City's Exhibit D – Future Land Use Map

GAUTIER, MISSISSIPPI

PLANNING DEPARTMENT

PUBLIC HEARING APPLICATION

Public Hearing Number

GPC 20-23 VAR

TO BE HEARD BY GAUTIER PLANNING COMMISSION:		FEE:
Zoning Change		$300.00
Major Development		$100.00
Variance	✓	$175.00
Appeal to Staff Decision		$100.00

****

Name of Applicant : David Fulton

Name of Business: _____ Phone: 228-990-2771

Property Address: 1706 Bell Circle Mailing Address (if Different): PID 87110327.000

E-Mail Address: _____

Reason for request, location and intended use of Property: storage shed too close to property line need variance for four feet

ATTACHMENTS REQUIRED AS APPLICABLE:

_____ 1. Diagram of intended use, showing dimensions and distances of property, building with setbacks, parking spaces, entrances and exits.

_____ 2. A detailed project narrative.

_____ 3. Copy of protective covenants or deed restrictions, if any.

_____ 4. Copies of approvals, or requests for approval, from other agencies, such as, but not limited to, the Mississippi State Department of Health, U.S. Army Corp of Engineers, Mississippi Department of Environmental Quality and Department of Marine Resources.

_____ 5. Any other information requested by the Economic Development/Planning Director and/or members of the Technical Review Committee.

Signature of Applicant: [signature] Date of Application: 10-13-20

FOR OFFICE USE ONLY

Date Received 10-15-2020 Verify as Complete BR

Fee Amount Received ~~$25~~ 175.00 Initials of Employee Receiving Application BR

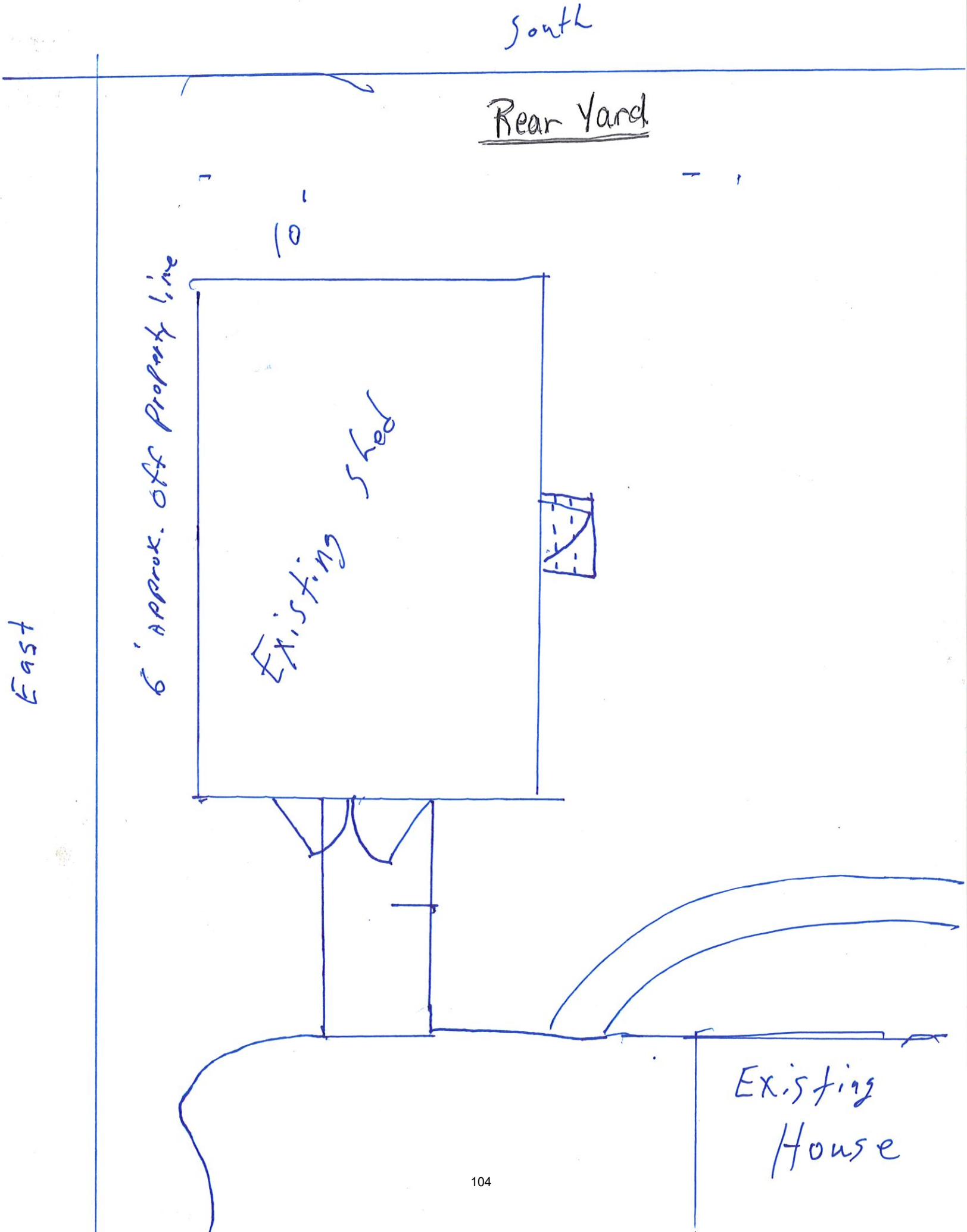
South
Rear Yard
10'
6' approx. off property line
Existing Shed
East
Existing House

Requesting variance for shed at 1706 Beth Circle. Building was constructed by contractor that told me he would handle everything as I was working out of town at the time. Needing to get this pushed through so I can aquire a permit to enclose my garage. This is a hardship situation as my wife has been having knee problems; and has had one surgery already. She is not far from knee replacement surgery and we need a bedroom and bath downstairs as all of the bed and bathrooms are upstairs on this property.

Respectfully yours,

David Fulton

87110327.000 FULTON DAVID E & MELESSIA C

PIDN: 87110327.000

GISP: 871.12-03-0212.00

Owner Information

Percent of Ownership: PERCENT_OF

Name: FULTON DAVID E & MELESSIA C

Name 2:

Mailing Address: 1706 BETH CR
GAUTIER MS
39553

Site Address: 1706 BETH CR GAUTIER

Land Information

Section: 12

Acreage: .00

Township: 8S

Range: 7W

Street Name BETH
CR

Value and Tax Information

Total Assessed Value: 8396

Total Appraised Value: 83960

Improvement Value: 74260

Land Value: 9700

Tax Amount: 932

SQ FT: 1788

Year Built: 1972

Legal Description

Description: LOT 78 SEACLIFFE S/D 3RD ADD
DB 1299-558 (212 Map871.12-03)

Deed Book / Page: 1299 / 558

https://webmap.co.jackson.ms.us/

87110327.000 FULTON DAVID E & MELESSIA C

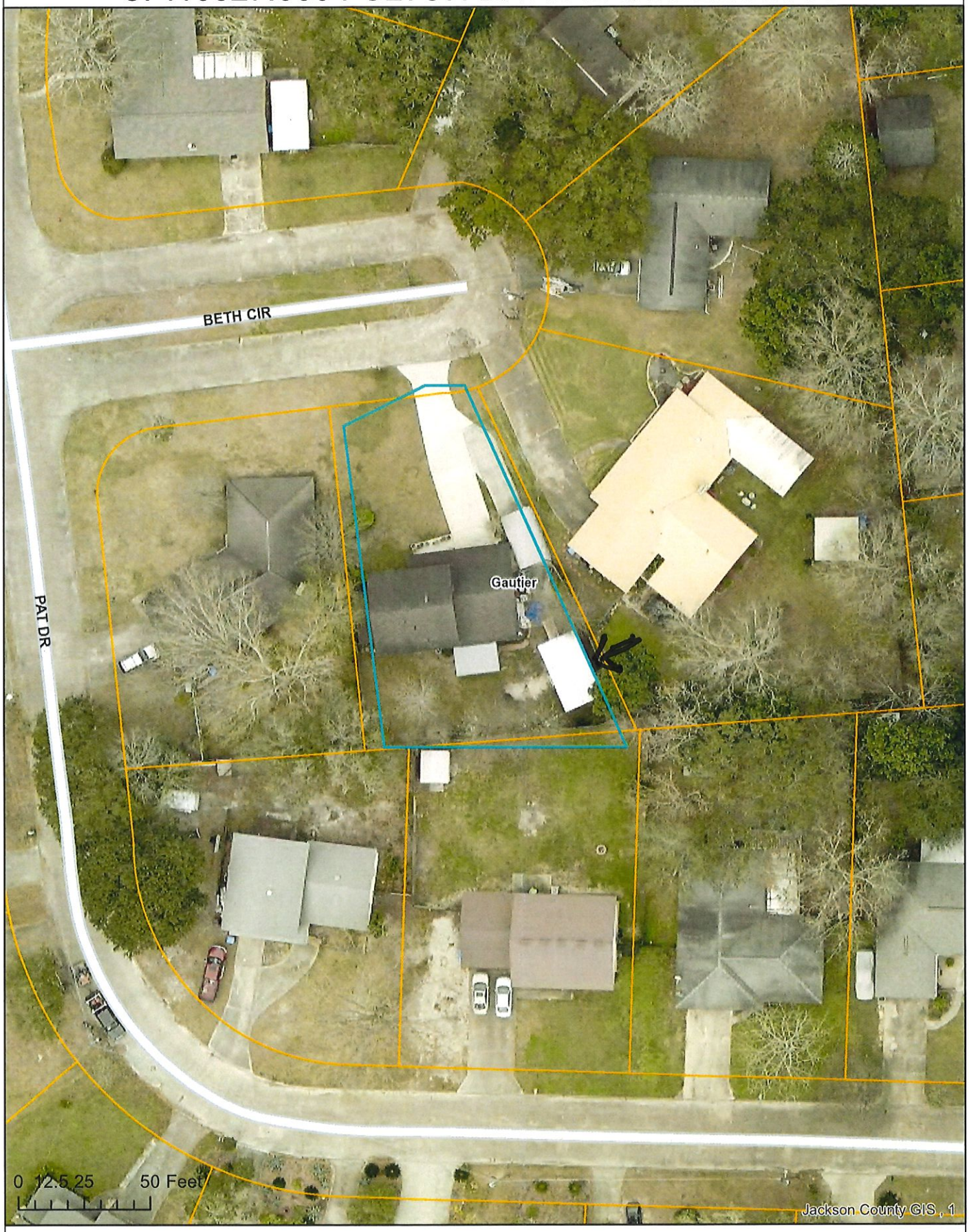

https://webmap.co.jackson.ms.us/ 11/12/2020

EXHIBIT A

LOCATION MAP

Prepared by:
City of Gautier
Planning Department

Legend

- Gautier_Parcels_Clip
- GAUTIER_CITYLIMTS
- Centerlines_Clip

EXHIBIT B

ZONING MAP

Prepared by:
City of Gautier
Planning Department

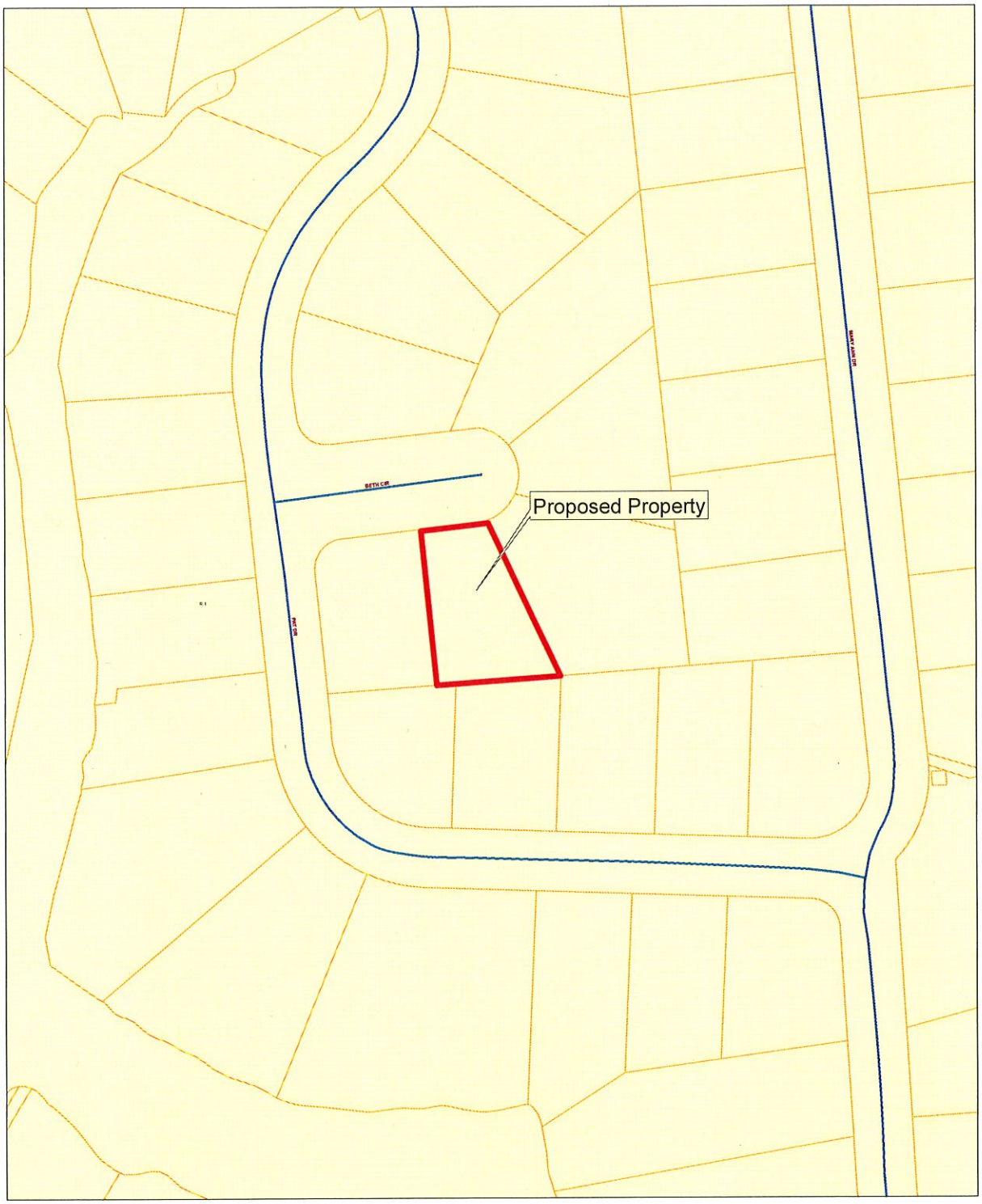

Legend

- Gautier_Parcels_Clip
- GAUTIER_CITYLIMTS
- Centerlines_Clip

Zoning

ZONECODE

- AG
- C-1
- C-2
- C-3
- I-2
- MURC-1
- MURC-2
- MURC-MW
- PL
- PUD
- R-1
- R-2
- R-3
- RE
- TC

EXHIBIT C

EXISTING LAND USE MAP

Prepared by:
City of Gautier
Planning Department

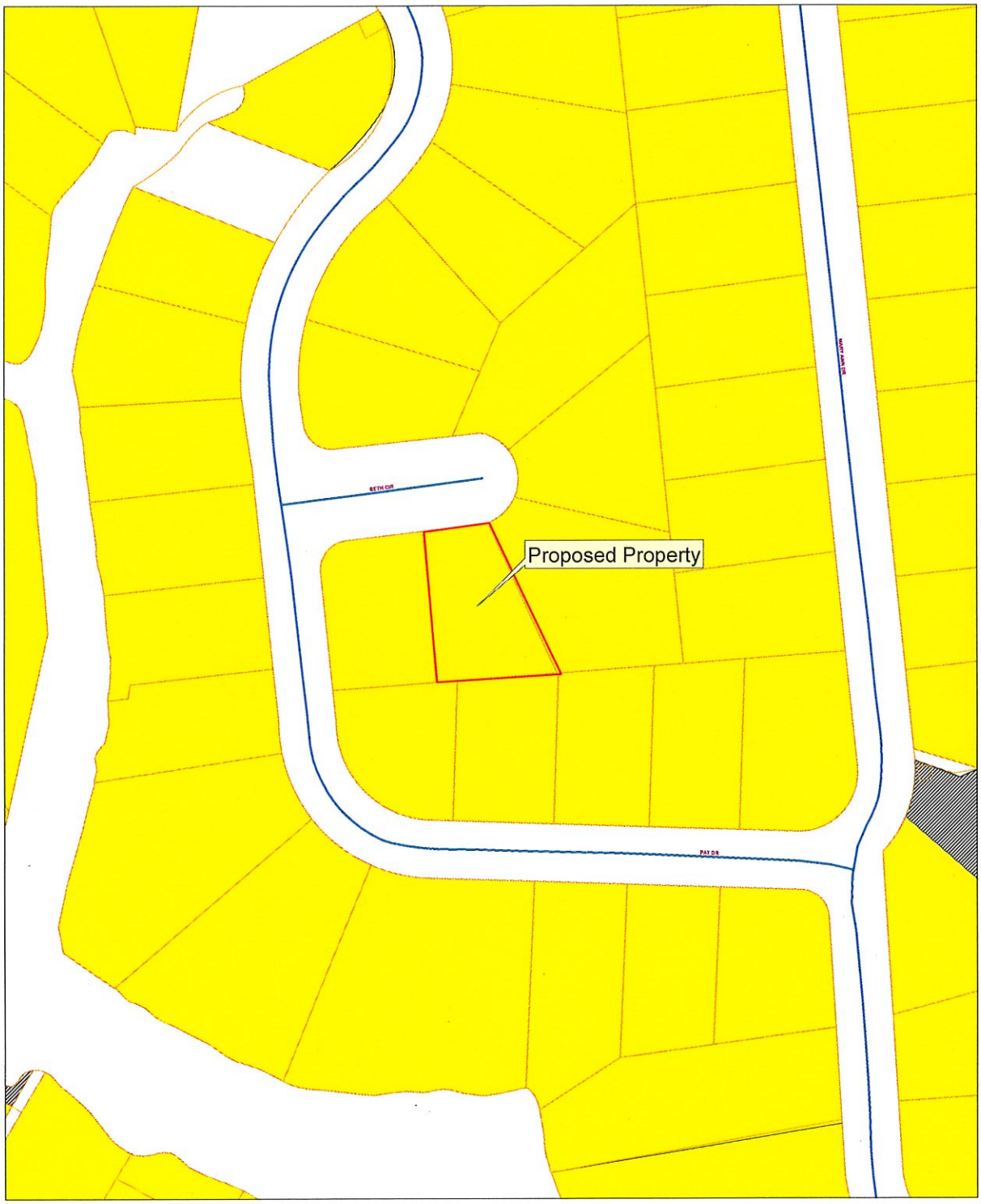

Legend

- Gautier_Parcels_Clip
- GAUTIER_CITYLIMTS
- Centerlines_Clip

EXISTING LAND USE

ELU_08

- commercial-retail
- conservation
- civic
- industrial
- marina/fish camps
- high density residential
- mobile home
- mobile home park
- medium density residential
- office
- recreation
- very low to low density residential
- utility
- vacant

EXHIBIT D

FUTURE LAND USE MAP

Prepared by:
City of Gautier
Planning Department

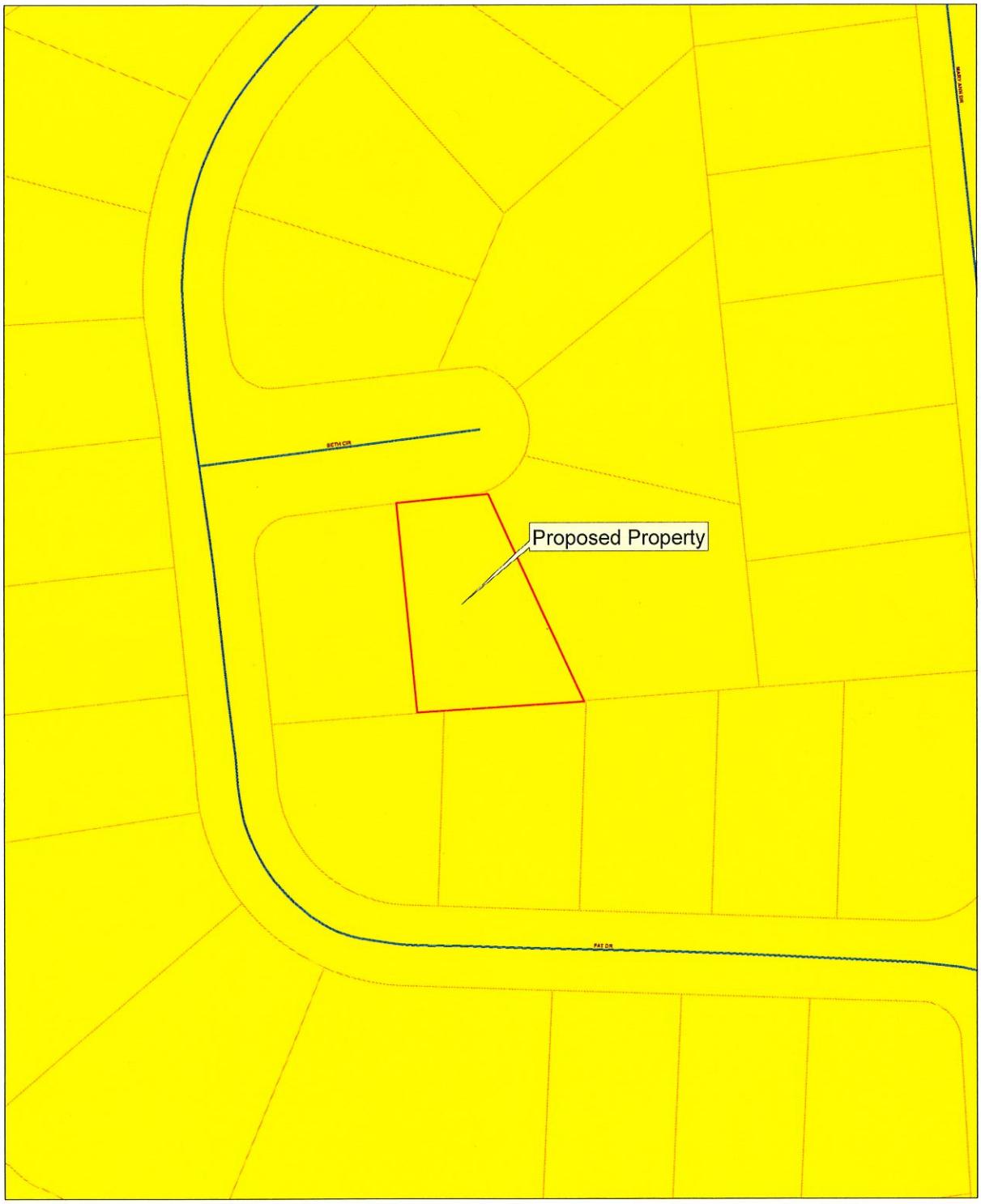

Legend

- Gautier_Parcels_Clip
- GAUTIER_CITYLIMTS
- Centerlines_Clip

FUTURE LAND USE

FLU_Class

- Civic
- high impact commercial
- Conservation
- High Density Residential
- Industrial
- Low Density Residential
- Medium Density Residential
- Mobile Home Residential
- low impact Commercial
- Recreational
- recreational commercial
- Regional Scale Commercial
- mixed use residential
- Town Center
- Very Low Density Residential

Excerpt from December 3, 2020 Planning Commission Meeting:

The Planning Department has received a request from David Fulton for a four foot (4') variance to side yard set-back requirements for an accessory building in a R-1 Low Density Single-Family Residential Zoning District at 1706 Beth Circle. (GPC Case No. 20-23-VAR)

Scott Ankerson, Planning Director, gave a brief overview of the case.

REQUEST:

The Planning Department has received a request from David Fulton for a four foot (4') variance to side yard set-back requirements for an accessory building in a R-1 Low Density Single-Family Residential Zoning District. 1706 Beth Circle, PID #87110327.000. The application fee of $175 was paid on October 15, 2020. All public notice requirements have been met.

BACKGROUND:

The request property is zoned R-1 Low Density Single-Family Residential. The property owner has added an accessory building to the side of his residence without obtaining the proper permit. The accessory building is located six feet (6') from the side property line. The required side setback is ten feet (10'). The applicant is seeking a Variance of four feet (4') to minimum side yard setback requirements.

DISCUSSION:

The property owner requests a variance to the minimum side yard setbacks in a R-1 Low Density Single-Family Residential District from ten feet (10') to six feet (6') to allow a storage shed that was built without a permit and does not meet side yard minimum requirements for an accessory building.

DETERMINATION OF APPLICABLE LAW:

The Unified Development Ordinance (UDO) defines **Variances** as:

> A Variance is a relaxation of the terms of the Unified Development Ordinance where such Variance will not be contrary to the public interest and where, owing to conditions peculiar to the property, a literal enforcement of the Ordinance would result in an unnecessary or undue hardship. As used in this Ordinance, a Variance is authorized only for height, area and size of structure, or size of yards, separation of uses, open spaces, off-street parking spaces and some subdivision of property. The establishment or expansion of a use not permitted shall not be allowed by Variance.

The UDO defines **Hardship** as:

> Hardship means the unnecessary hardship that would result from a failure to grant the requested variance or special exception. An unnecessary hardship exists if:
> (1) the land in question cannot yield a reasonable return if used only
> (a) for a purpose allowed in that zone (applicable to special exceptions), or
> (b) as permitted by the dimensional requirements of this ordinance (applicable to variances);
> (2) that the plight of the owner is due to unique circumstances of the land for which the variance or special exception is sought; and
> (3) that the use to be authorized by the variance will not alter the essential character of the locality.

The UDO defines **Setback** as:

SETBACK: (SEE YARD*)* The minimum horizontal distance between the lot or property line and the nearest front, side or rear line of the building as measured to the outside face at the enclosing wall or in structures lacking walls (as in the case of a carport) to the face of the supporting columns and beams. Setback does not include roof overhangs, except that they shall not encroach on more than fifty (50) percent of the required setback.

A. **SETBACK, FRONT:** The yard area extending along the full width of a front lot line between side lot lines and from the front lot line to the front building line in depth.

B. **SETBACK, REAR:** The yard area extending across the full width of the lot and lying between the rear lot line and the nearest line of the building. Rear-yard depth shall be measured at right angles to the rear line of the lot.

C. **SETBACK, SIDE:** The yard area lying between the side line of the lot and the nearest line of the building and extending from the front yard to the rear yard, or in the absence of a front yard or a rear yard, to the front or rear lot lines. Side-yard width shall be measured at right angles to side lines of the lot.

UDO SECTION 4.18: Variance

In certain circumstances, a Variance from the dimensional requirements (i.e. height, setbacks, square footage) of this ordinance may be granted if the applicant can prove that because of physical constraints of the property involved, he is not able to build the same type of structure that other persons with the same zoning classification can build. Variances for uses permitted will not be considered in as much as “use Variances” are not legal in the State of Mississippi.

Most Variances must be granted by the City Council; however, certain minor Variances may be granted by the Economic Development Director in accordance with *Section 4.18.3* below.

4.18.1 Who May Initiate

A request for a Variance may be initiated by the property owner or agent of the owner provided that said property has not been denied a previous request for a Variance for the same property or portion of property within the past twelve (12) months.

4.18.2 Application for Variance

Applications for a Variance (from dimensional requirements) may be filed on the appropriate application available from the Economic Development/Planning Department and shall include all requested information, attachments and submittals:

4.18.3 Administrative Variances

The following dimensional variances may be granted by the Economic Development Director at his/her discretion (Note: Within the COR, Corridor Overlay District, applicants shall be required to mitigate a requested dimensional variance in accordance with the Tier Land Use Provisions in Section 5.11):

A. 30% of required off-street parking spaces and/or

B. 30% of required setbacks from property lines

4.18.4 Criteria for Approval

The Variance application shall demonstrate the following:

A. That special conditions and circumstances exist which are peculiar to this particular site (lot or parcel), structure or building involved and which are not applicable to other sites (lots or parcels) or structures or buildings in the same district;

B. That literal interpretation of the provisions of this Ordinance would deprive the applicant of rights commonly enjoyed by other properties in the same district under the provisions of this Ordinance;

C. That the special conditions and circumstances do not result from actions of the applicant; and

D. That granting the Variance requested will not confer upon the applicant any special privilege that is denied by this Ordinance to other similar sites (lots or parcels) structures or buildings in the same district.

RECOMMENDATION & CONCLUSION:

Staff has been presented with no evidence or information indicating that the variance criteria listed in UDO Article IV Section 4.18.4 A through D have been met. If recommending approval, Planning Commission shall record a “Finding of Fact” regarding the “Criteria for Approval” from the UDO as listed above.

The Planning Commission may:

1. Recommend that City Council approve variance request as presented;
2. Recommend that City Council approve the variance request with changes; or
3. Recommend that City Council deny variance request.

David Fulton stated that he hired a contractor to build the storage shed while he was out of town. The contractor told him that he would take care of permits and everything. Mr. Fulton was not aware that the storage shed was built without a permit or that it was too close to the property line until he went to get a permit to enclose his garage. It was at that time the inspector discovered the storage shed was too close to the property line and a permit had not been issued.

Commissioner Jamison asked when the storage shed was built and noted that the Carolina carport on the property also appeared to be too close to the property line.

Chairman Wooten asked the size of the storage shed.

Mr. Fulton stated the shed was 12' x 24' and that it was built in February 2018.

Mr. Ankerson advised that the existing Carolina carport had been there for years and was grandfathered in.

Commissioner Davis asked what kind of foundation the storage shed had to which **Mr. Fulton** replied that it was on concrete blocks.

There were none in attendance speaking in opposition and Staff had received no calls or letters opposing the request.

ACTION TAKEN:

Commissioner Green made a motion to recommend Council approve the request as presented.

Chairman Wooten then made a motion to amend the original motion to add that approving the request would not alter the character of the neighborhood.

Commissioner Jamison seconded Chairman Wooten's motion and the following vote was recorded:

AYES: **David Wooten**
Kay C. Jamison
Jimmy Green
Joshua Ward
William Davis
Paul Gainer
James Lee

Motion passed.

Commissioner Ward then seconded the original motion as amended and the following vote was recorded:

AYES:	**David Wooten**
	Kay C. Jamison
	Jimmy Green
	Joshua Ward
	William Davis
	Paul Gainer
	James Lee

Motion passed.

Councilman Jackson made the motion to accept the Planning Commission's recommendation, as presented, and to approve a twenty-two foot (22') variance to front yard set-back requirements for an accessory structure in an R-1 Low Density Single-Family Residential Zoning District (GPC #20-24-VAR) (PID# 85105548.000) at 2402 Oxford Drive, Gautier, MS, finding that that all criteria under Section 4.18.4 of the Unified Development Ordinance have been met based on the evidence in the record, and finding that the variance will not alter the character of the neighborhood. Councilman Vaughan seconded the motion. The vote was carried unanimously.

There came for consideration of the Mayor and Members of the Council of the City of Gautier, Mississippi, the following:

ORDER NUMBER 500-2020

WHEREAS, the homeowner of 2404 Oxford Drive, (PID# 85105548.000) has requested a variance to allow a twenty-two foot (22') front yard set-back that would allow an accessory structure to be located in front of the principal use in an R-1 Low Density Single-Family Residential Zoning District; and

WHEREAS, the property is zoned R-1 Low Density Single-Family Residential, and the accessory structure is currently located three feet (3') from the property line (required set back is twenty-five feet (25')); and

WHEREAS, the property owner requests a variance to the minimum front yard setbacks for accessory structures from twenty-five feet (25') to three feet (3') to allow a carport that was built without a permit and does not meet front yard minimum requirements for an accessory building; and

WHEREAS, the Mayor and Councilmembers hereby find that all criteria under Section 4.18.4 of the Unified Development Ordinance have been met in this case;

IT IS HEREBY ORDERED by the Mayor and Members of the Council of the City of Gautier, Mississippi, that the City Council hereby adopts the Gautier Planning Commission's recommendation to approve this variance;

IT IS FURTHER ORDERED that the City Manager or City Clerk is authorized to execute any and all documents necessary for this purpose.

Motion was made by **Councilman Jackson**, seconded by **Councilman Vaughan,** and the following vote was recorded:

AYES: **Phil Torjusen**
Mary Martin
Cameron George
Richard Jackson
Casey Vaughan
Rusty Anderson
Adam Colledge

NAYS: **None**

_____
MAYOR

ATTEST:

_____

CITY CLERK

Passed and Adopted by Mayor and Members of the Council of the City of Gautier, Mississippi, at the meeting of December 15, 2020.

CITY OF GAUTIER
MEMORANDUM

To: Paula Yancey, City Manager
From: Babs Logan, Planning Technician
Date: 12/4/2020
Subject: Consider a request for a twenty-two foot (22') variance to front yard set-back requirements for an accessory structure in a R-1 Low Density Single-Family Residential Zoning District. 2404 Oxford Drive, (GPC #20-24-VAR)

REQUEST:
The Planning Department has received a request from Douglas and LaTonya Kimbrough for a twenty-two foot (22') variance to front yard set-back requirements for an accessory structure in a R-1 Low Density Single-Family Residential Zoning District. 2404 Oxford Drive, PID #85105548.000. The application fee of $175 was paid on October 22, 2020. All public notice requirements have been met.

BACKGROUND:
The request property is zoned R-1 Low Density Single-Family Residential. The property owners have added an accessory structure in front of their residence without obtaining the proper permit. Measurements made by the City Building Inspector show the accessory structure is located three feet (3') from the front property line. The required front setback is twenty-five feet (25'). The applicant is seeking a Variance of twenty-two feet (22') to minimum front yard setback requirements.

Measurements made by the Building Inspector show the carport to be 20' long and 24' wide and that it begins two feet (2') from the house. The house is located twenty-five feet (25') from the front property line.

DISCUSSION:
The property owners request a variance to the minimum front yard setbacks in a R-1 Low Density Single-Family Residential District from twenty-five feet (25') to three feet (3') to allow a carport that was built without a permit and does not meet front yard minimum requirements for an accessory building.

DETERMINATION OF APPLICABLE LAW:

The Unified Development Ordinance (UDO) defines Variances as:
A Variance is a relaxation of the terms of the Unified Development Ordinance where such Variance will not be contrary to the public interest and where, owing to conditions peculiar to the property, a literal enforcement of the Ordinance would result in an unnecessary or undue hardship. As used in this Ordinance, a Variance is authorized only for height, area and size of structure, or size of yards, separation of uses, open spaces, off-street parking spaces and some subdivision of property. The establishment or expansion of a use not permitted shall not be allowed by Variance.

The UDO defines Hardship as:

Hardship means the unnecessary hardship that would result from a failure to grant the requested variance or special exception. An unnecessary hardship exists if:
(1) the land in question cannot yield a reasonable return if used only
(a) for a purpose allowed in that zone (applicable to special exceptions), or
(b) as permitted by the dimensional requirements of this ordinance (applicable to variances);
(2) that the plight of the owner is due to unique circumstances of the land for which the variance or special

exception is sought; and
(3) that the use to be authorized by the variance will not alter the essential character of the locality.

The UDO defines Setback as:

Setback: (See Yard) The minimum horizontal distance between the lot or property line and the nearest front, side or rear line of the building as measured to the outside face at the enclosing wall or in structures lacking walls (as in the case of a carport) to the face of the supporting columns and beams. Setback does not include roof overhangs, except that they shall not encroach on more than fifty (50) percent of the required setback.

SETBACK, FRONT: The yard area extending along the full width of a front lot line between side lot lines and from the front lot line to the front building line in depth.

SETBACK, REAR: The yard area extending across the full width of the lot and lying between the rear lot line and the nearest line of the building. Rear-yard depth shall be measured at right angles to the rear line of the lot.

SETBACK, SIDE: The yard area lying between the side line of the lot and the nearest line of the building and extending from the front yard to the rear yard, or in the absence of a front yard or a rear yard, to the front or rear lot lines. Side-yard width shall be measured at right angles to side lines of the lot.

UDO SECTION 4.18: Variance
In certain circumstances, a Variance from the dimensional requirements (i.e. height, setbacks, square footage) of this ordinance may be granted if the applicant can prove that because of physical constraints of the property involved, he is not able to build the same type of structure that other persons with the same zoning classification can build. Variances for uses permitted will not be considered in as much as “use Variances” are not legal in the State of Mississippi.
Most Variances must be granted by the City Council; however, certain minor Variances may be granted by the Economic Development Director in accordance with Section 4.18.3 below.
4.18.1 Who May Initiate
A request for a Variance may be initiated by the property owner or agent of the owner provided that said property has not been denied a previous request for a Variance for the same property or portion of property within the past twelve (12) months.
4.18.2 Application for Variance
Applications for a Variance (from dimensional requirements) may be filed on the appropriate application available from the Economic Development/Planning Department and shall include all requested information, attachments and submittals:
4.18.3 Administrative Variances
The following dimensional variances may be granted by the Economic Development Director at his/her discretion (Note: Within the COR, Corridor Overlay District, applicants shall be required to mitigate a requested dimensional variance in accordance with the Tier Land Use Provisions in Section 5.11):
30% of required off-street parking spaces and/or
30% of required setbacks from property lines
4.18.4 Criteria for Approval
The Variance application shall demonstrate the following:
That special conditions and circumstances exist which are peculiar to this particular site (lot or parcel), structure or building involved and which are not applicable to other sites (lots or parcels) or structures or buildings in the same district;
That literal interpretation of the provisions of this Ordinance would deprive the applicant of rights commonly enjoyed by other properties in the same district under the provisions of this Ordinance;
That the special conditions and circumstances do not result from actions of the applicant; and

That granting the Variance requested will not confer upon the applicant any special privilege that is denied by this Ordinance to other similar sites (lots or parcels) structures or buildings in the same district.

RECOMMENDATION:

The Planning Commission recommends that City Council approve the request because the carport is conducive with the area and that it was nicely built and matched the house.

The City Council may:

Approve the variance request as presented;
Approve the variance request with changes; or
Deny variance request.

ATTACHMENTS:

1. Excerpt GPC Meeting 12.3.20 (GPC 20-24-VAR)
2. GPC Complete Packet 20-24-VAR

Gautier Planning Commission

Regular Meeting Agenda

December 3, 2020

GPC #20-24-VAR

2404 Oxford Drive

VII. NEW BUSINESS

1. CONSIDER A REQUEST FOR A TWENTY-TWO FOOT (22') VARIANCE TO FRONT YARD SET-BACK REQUIREMENTS FOR AN ACCESSORY BUILDING IN A R-1 LOW DENSITY SINGLE-FAMILY RESIDENTIAL ZONING DISTRICT. 2404 OXFORD DRIVE, (GPC #20-24-VAR)

GAUTIER PUBLIC HEARING PROCESS (PLANNING COMMISSION)

Planning Commission Chairman to follow procedure below. All questions/comments to be directed to the Council and not to applicant, staff, or other attendees of the meeting.

1. Chairman announces the case.

2. Chairman makes statement, "This is a Public Hearing and all statements to be made need to be true and accurate for the record."

3. Staff gives brief overview of case.

4. Applicant presents their case.

5. Anyone to speak in support of the Request? Please state your name and address for the record.

6. Anyone to speak in opposition of the Request? Please state your name and address for the record.

7. Any final comments from the applicant?

8. Questions from Commission?

9. Chairman closes public hearing – "This closes the Public Hearing portion of this case" bang of gavel

10. Motion/Deliberation/Vote

CITY OF GAUTIER
STAFF REPORT

To: Chairman and Members, Planning Commission

From: Scott Ankerson, Planning Director

Date: November 18, 2020

Subject: Consider a request for a twenty-two foot (22') variance to front yard set-back requirements for an accessory structure in a R-1 Low Density Single-Family Residential Zoning District. 2404 Oxford Drive, (GPC #20-24-VAR)

REQUEST:

The Planning Department has received a request from Douglas and LaTonya Kimbrough for a twenty-two foot (22') variance to front yard set-back requirements for an accessory structure in a R-1 Low Density Single-Family Residential Zoning District. 2404 Oxford Drive, PID #85105548.000. The application fee of $175 was paid on October 22, 2020. All public notice requirements have been met.

BACKGROUND:

The request property is zoned R-1 Low Density Single-Family Residential. The property owners have added an accessory structure in front of their residence without obtaining the proper permit. Measurements made by the City Building Inspector show the accessory structure is located three feet (3') from the front property line. The required front setback is twenty-five feet (25'). The applicant is seeking a Variance of twenty-two feet (22') to minimum front yard setback requirements.

Measurements made by the Building Inspector show the carport to be 20' long and 24' wide and that it begins two feet (2') from the house. The house is located twenty-five feet (25') from the front property line.

DISCUSSION:

The property owners request a variance to the minimum front yard setbacks in a R-1 Low Density Single-Family Residential District from twenty-five feet (25') to three feet (3') to allow a carport that was built without a permit and does not meet front yard minimum requirements for an accessory building.

DETERMINATION OF APPLICABLE LAW:

The Unified Development Ordinance (UDO) defines **Variances** as:

> A Variance is a relaxation of the terms of the Unified Development Ordinance where such Variance will not be contrary to the public interest and where, owing to conditions peculiar to the property, a literal enforcement of the Ordinance would result in an unnecessary or undue hardship. As used in this Ordinance, a Variance is authorized only for height, area and size of structure, or size of yards, separation of uses, open spaces, off-street parking spaces and some subdivision of property. The establishment or expansion of a use not permitted shall not be allowed by Variance.

The UDO defines **Hardship** as:

> Hardship means the unnecessary hardship that would result from a failure to grant the requested variance or special exception. An unnecessary hardship exists if:
> (1) the land in question cannot yield a reasonable return if used only
> (a) for a purpose allowed in that zone (applicable to special exceptions), or
> (b) as permitted by the dimensional requirements of this ordinance (applicable to variances);
> (2) that the plight of the owner is due to unique circumstances of the land for which the variance or special exception is sought; and
> (3) that the use to be authorized by the variance will not alter the essential character of the locality.

The UDO defines **Setback** as:

SETBACK: (SEE YARD*)* The minimum horizontal distance between the lot or property line and the nearest front, side or rear line of the building as measured to the outside face at the enclosing wall or in structures lacking walls (as in the case of a carport) to the face of the supporting columns and beams. Setback does not include roof overhangs, except that they shall not encroach on more than fifty (50) percent of the required setback.

A. **SETBACK, FRONT:** The yard area extending along the full width of a front lot line between side lot lines and from the front lot line to the front building line in depth.

B. **SETBACK, REAR:** The yard area extending across the full width of the lot and lying between the rear lot line and the nearest line of the building. Rear-yard depth shall be measured at right angles to the rear line of the lot.

C. **SETBACK, SIDE:** The yard area lying between the side line of the lot and the nearest line of the building and extending from the front yard to

the rear yard, or in the absence of a front yard or a rear yard, to the front or rear lot lines. Side-yard width shall be measured at right angles to side lines of the lot.

UDO SECTION 4.18: Variance

In certain circumstances, a Variance from the dimensional requirements (i.e. height, setbacks, square footage) of this ordinance may be granted if the applicant can prove that because of physical constraints of the property involved, he is not able to build the same type of structure that other persons with the same zoning classification can build. Variances for uses permitted will not be considered in as much as "use Variances" are not legal in the State of Mississippi.

Most Variances must be granted by the City Council; however, certain minor Variances may be granted by the Economic Development Director in accordance with *Section 4.18.3* below.

4.18.1 Who May Initiate

A request for a Variance may be initiated by the property owner or agent of the owner provided that said property has not been denied a previous request for a Variance for the same property or portion of property within the past twelve (12) months.

4.18.2 Application for Variance

Applications for a Variance (from dimensional requirements) may be filed on the appropriate application available from the Economic Development/Planning Department and shall include all requested information, attachments and submittals:

4.18.3 Administrative Variances

The following dimensional variances may be granted by the Economic Development Director at his/her discretion (Note: Within the COR, Corridor Overlay District, applicants shall be required to mitigate a requested dimensional variance in accordance with the Tier Land Use Provisions in Section 5.11):

A. 30% of required off-street parking spaces and/or

B. 30% of required setbacks from property lines

4.18.4 Criteria for Approval

The Variance application shall demonstrate the following:

A. That special conditions and circumstances exist which are peculiar to this particular site (lot or parcel), structure or building involved and which are not applicable to other sites (lots or parcels) or structures or buildings in the same district;

B. That literal interpretation of the provisions of this Ordinance would deprive the applicant of rights commonly enjoyed by other properties in the same district under the provisions of this Ordinance;

C. That the special conditions and circumstances do not result from actions of the applicant; and

D. That granting the Variance requested will not confer upon the applicant any special privilege that is denied by this Ordinance to other similar sites (lots or parcels) structures or buildings in the same district.

RECOMMENDATION & CONCLUSION:

Staff has been presented with no evidence or information indicating that the variance criteria listed in UDO Article IV Section 4.18.4 A through D have been met. If recommending approval, Planning Commission shall record a "Finding of Fact" regarding the "Criteria for Approval" from the UDO as listed above.

The Planning Commission may:

1. Recommend that City Council approve variance request as presented;
2. Recommend that City Council approve the variance request with changes; or
3. Recommend that City Council deny variance request.

ATTACHMENTS:

1. Applicant's Exhibit 1 – Application
2. City's Exhibit A – Location Map
3. City's Exhibit B – Existing Zoning Map
4. City's Exhibit C – Existing Land Use Map
5. City's Exhibit D – Future Land Use Map

GAUTIER, MISSISSIPPI

PLANNING DEPARTMENT

PUBLIC HEARING APPLICATION

Public Hearing Number

GPC 20-24-VAR

TO BE HEARD BY GAUTIER PLANNING COMMISSION:		FEE:
Zoning Change	_____	$300.00
Major Development	_____	$100.00
Variance	_____	$175.00
Appeal to Staff Decision	_____	$100.00

****

Name of Applicant : Douglas LaTonya Kimbrough

Name of Business: _____ Phone: 228-249-4122

Property Address: 2404 Oxford Dr. Mailing Address (if Different): PID # 85105548.000

E-Mail Address: latonya-kimbrough@gmail-com

Reason for request, location and intended use of Property: Carport added to property to Protect vehicles from weather and shelter from the rain.

ATTACHMENTS REQUIRED AS APPLICABLE: Need variance

✓ 1. Diagram of intended use, showing dimensions and distances of property, building with setbacks, parking spaces, entrances and exits.

✓ 2. A detailed project narrative.

_____ 3. Copy of protective covenants or deed restrictions, if any.

_____ 4. Copies of approvals, or requests for approval, from other agencies, such as, but not limited to, the Mississippi State Department of Health, U.S. Army Corp of Engineers, Mississippi Department of Environmental Quality and Department of Marine Resources.

_____ 5. Any other information requested by the Economic Development/Planning Director and/or members of the Technical Review Committee.

Signature of Applicant: Latonya Kimbrough Date of Application: 10-22-20

FOR OFFICE USE ONLY

Date Received 10/22/20 Verify as Complete BR

Fee Amount Received 175.00 Initials of Employee Receiving Application BR

I live at 2404 Oxford Drive in Gautier Ms. 39553. In December my husband and I had a 12 x 24 Carport placed in our yard to protect our vehicles from the weather and as shelter from the rain when transporting my grandsons. We had no idea that we needed a permit or anything to have this placed on our property. We paid around $ 3,000.00 to have it installed and we really don't want to have to destroy it. We are asking for a little understanding and forgiveness for us not knowing how to go about getting this done.

Latoya
Kirby

feet from
Property line
of Stop
13'x6"
feet from
carport to
edge Driveway
16'x6"
feet from
edge of Driveway
16'x6"

Feet from
Carport to
Property line
of 2400
40'

85105548.000 KIMBROUGH DOUGLAS &

PIDN: 85105548.000

GISP: 871.01-02-0026.00

Owner Information

Percent of Ownership: PERCENT_OF

Name: KIMBROUGH DOUGLAS &

Name 2: LAYTONYA B

Mailing Address: 2404 OXFORD DRIVE
GAUTIER MS
39553

Site Address: 2404 OXFORD DR GAUTIER

Land Information

Section: 01

Township: 8S

Range: 7W

Street Name OXFORD DR

Acreage: .00

Value and Tax Information

Total Assessed Value: 2711

Total Appraised Value: 27110

Improvement Value: 22720

Land Value: 4390

Tax Amount: 283

SQ FT: 1067

Year Built: 1969

Legal Description

Description: LOT 47 COLLEGE PARK S/D
SEC 12/13-8-7 DB 1169-348
DB 1196-464 (26 Map871.01-02)

Deed Book / Page: 1169 / 348

https://webmap.co.jackson.ms.us/

85105548.000 KIMBROUGH DOUGLAS &

https://webmap.co.jackson.ms.us/

11/16/2020

STANDARD CARP(
DETAILS
12 ft to 24 ft SPA

TABLE 1
BOW/RAFTER FRAME, END POST, GROUND ANCHOR AND PANEL FASTENER SPACING SPECIFICATIONS

WIND EXPOSURE CATEGORY	ULTIMATE WIND SPEED (MPH)	NOMINAL WIND SPEED (MPH)	MAXIMUM GROUND SNOW LOAD (PSF)	MAXIMUM POST/RAFTER SPACING (FEET)	AVERAGE FASTENER SPACING ON-CENTERS ALONG RAFTERS OR PURLINS, AND POSTS OR GIRTS (INCHES)	
					METAL PANELS	SPACING
B OR C	105 TO 140	85 TO 112	35	5.0	29 Gauge	8
			65	4.0		

NOTES:
1. Specifications applicable to 29 gauge metal panels fastened directly to 12 or 14 gauge steel tube bow frames.
2. Fasteners consist of #12 x $\frac{3}{4}$" self-drilling screws with control seal washers.
3. Specifications applicable only for mean roof height of 24 feet or less and roof slopes of 7 to 27 degrees (1.5:12 to 6:12 pitch). Spacing requirements for other roof heights and/or slopes may vary.

TABLE 1 (HIGH WIND REGION)
BOW/RAFTER FRAME, END POST, GROUND ANCHOR AND PANEL FASTENER SPACING SPECIFICATIONS

WIND EXPOSURE CATEGORY	ULTIMATE WIND SPEED (MPH)	NOMINAL WIND SPEED (MPH)	MAXIMUM GROUND SNOW LOAD (PSF)	MAXIMUM POST/RAFTER SPACING (FEET)	AVERAGE FASTENER SPACING ON-CENTERS ALONG RAFTERS OR PURLINS, AND POSTS OR GIRTS (INCHES)	
					METAL PANELS	SPACING
B OR C	141 TO 150	113 TO 121	30	5.0	29 Gauge	8
B, C OR D	151 TO 170	122 TO 136	20	4.0	26 Gauge	6

NOTES:
1. Specifications applicable to 29 gauge and 26 gauge metal panels fastened directly to 12 or 14 gauge steel tube bow frames.
2. Fasteners consist of #12 x $\frac{3}{4}$" self-drilling screws with control seal washer.
3. Specifications applicable only for mean roof height of 24 feet or less and roof slopes of 7 to 27 degrees (1.5:12 to 6:12 pitch). Spacing requirements for other roof heights and/or slopes may vary.

NOTE: USE
- (●) $2\frac{1}{2}$" x $2\frac{1}{2}$" 14 Ga.
- ( ) $2\frac{1}{4}$" x $2\frac{1}{4}$" 12 Ga.

STEEL TUBE FOR ALL FRAME AND BASE RAIL MEMBERS UNLESS OTHERWISE SHOWN.

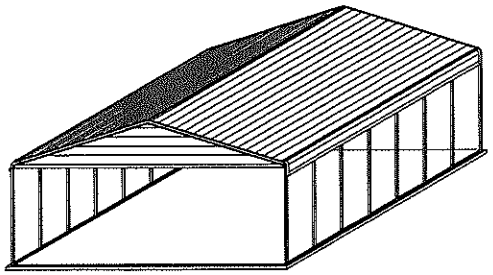

ISOMETRIC

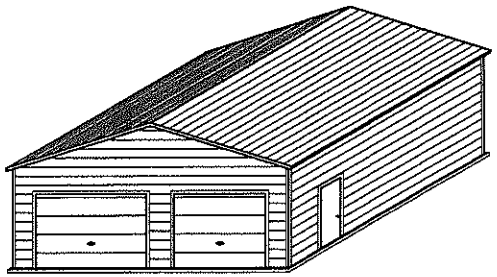

ISOMETRIC

GENERAL NOTES:

THESE PLANS PERTAIN ONLY TO THE STRUCTURE, INCLUDING MAIN WIND FORCE RESISTING SYSTEM (MWFRS), COMPONENTS AND CLADDING, AND BASE RAIL ANCHORAGE. OTHER DESIGN ISSUES, INCLUDING, BUT NOT LIMITED TO, PLUMBING, ELECTRICAL, INGRESS/EGRESS, PROPERTY SET-BACKS, OR OTHER LOCAL ZONING REQUIREMENTS ARE THE RESPONSIBILITY OF OTHERS.

THESE STRUCTURES ARE DESIGNED AS UTILITY/STORAGE BUILDINGS CAPABLE OF SUPPORTING THE DEAD LOAD OF THE STRUCTURE AND APPLICABLE LIVE AND WIND LOADS. IMPROVEMENTS NOT SPECIFICALLY ADDRESSED HEREIN, WHICH EXERT ADDITIONAL LOADS ON THE STRUCTURE SHALL BE AT THE OWNER'S RISK. CAROLINA CARPORTS SHALL NOT BE RESPONSIBLE FOR STRUCTURAL DAMAGE OR FAILURE DUE TO THE APPLICATION OF ADDITIONAL LOADS.

ALL STEEL TUBING SHALL BE 55 KSI STEEL OR BETTER. ALL METAL PANELS SHALL BE 80 KSI STEEL OR BETTER.

CONCRETE FOUNDATION DESIGN RECOMMENDATIONS:

TOP BRACE LENGTH: USE 2'-0" FOR 12' TO 18' SPANS
USE 4'-0" FOR 20' SPAN
USE 6'-0" FOR 22' TO 24' SPANS

NOTE: SEE TABLE 1 FOR SIZE & SPACING OF STEEL TUBE FRAME

METAL ROOF PANELS FASTENED WITH SDF's

STEEL TUBE (BENT BOW)

TOP BRACE

18 Ga. U-BRACE

STEEL TUBE (A-FRAME)

24'-0" MAX. BOW SPAN

18 Ga. U-BRACE REQUIRED FOR LEG HEIGHT 10'-12' OR SPAN LENGTH 20'-24'

STEEL TUBE

FINISHED GRADE

4" CONC. SLAB

SLOPE TO DRAIN **

SLOPE TO DRAIN **

½" A.B.

4" MIN.

6' TO 20' LEG HEIGHTS***

ASPHALT

GROUND ANCHORS (SEE SHEET 3)

* 12" MIN. OR AS REQUIRED BY LOCAL BUILDING CODE

** ⅛" PER FOOT OR AS REQ'D BY LOCAL BUILDING CODE

(1/2) TYPICAL BOW SECTION

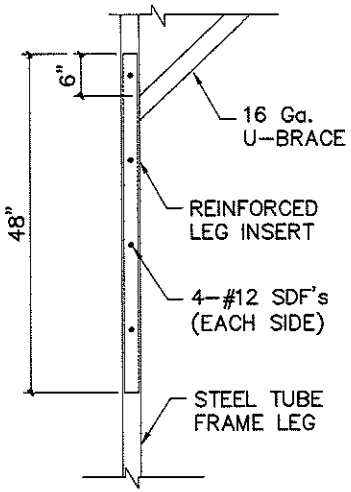

*** REINFORCED LEG INSERT

(LEG HEIGHTS >12' to 14')

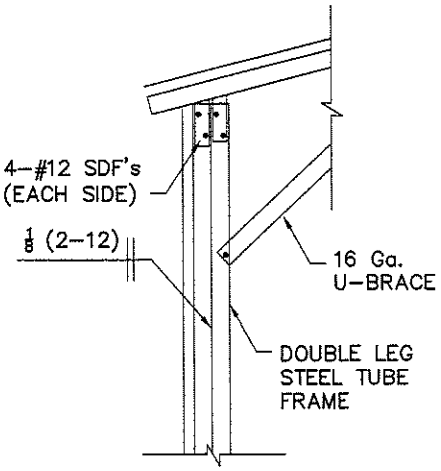

*** DOUBLE LEG

(LEG HEIGHTS >12' to 16')

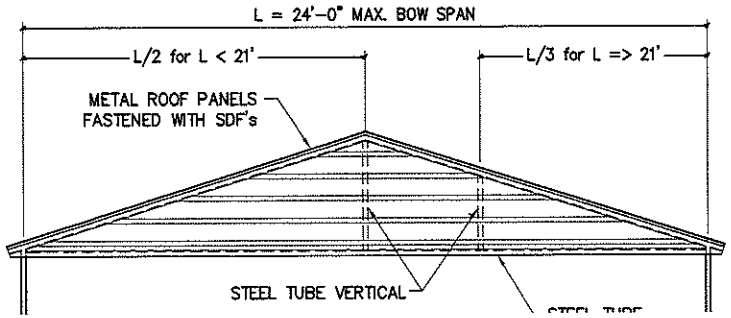

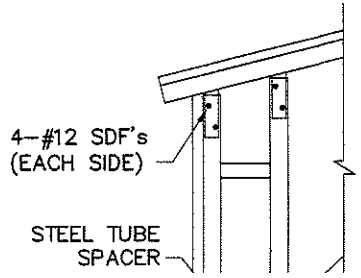

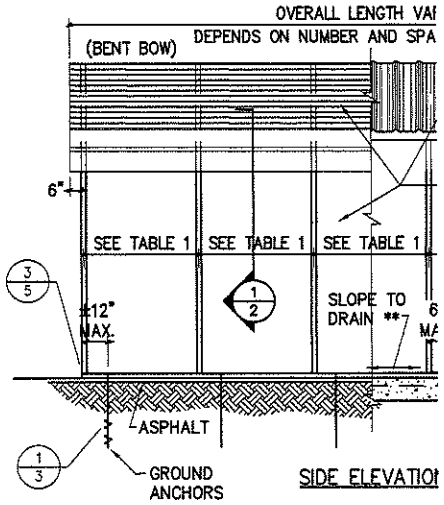

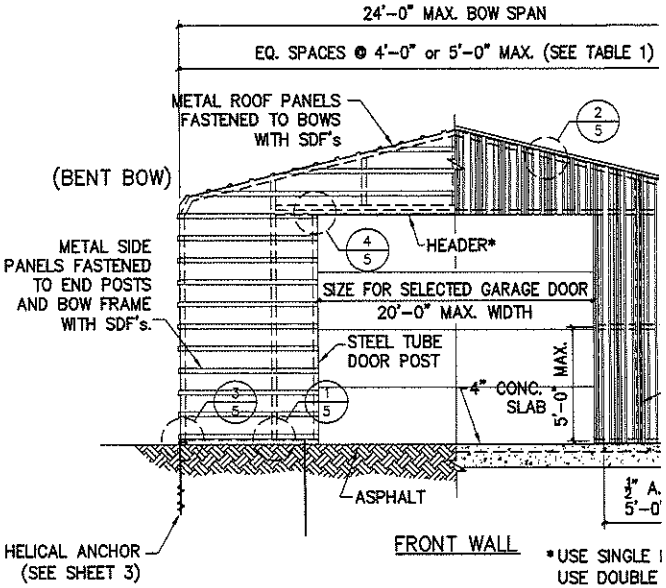

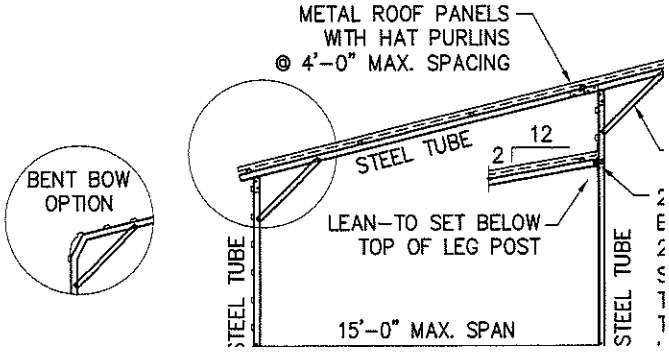

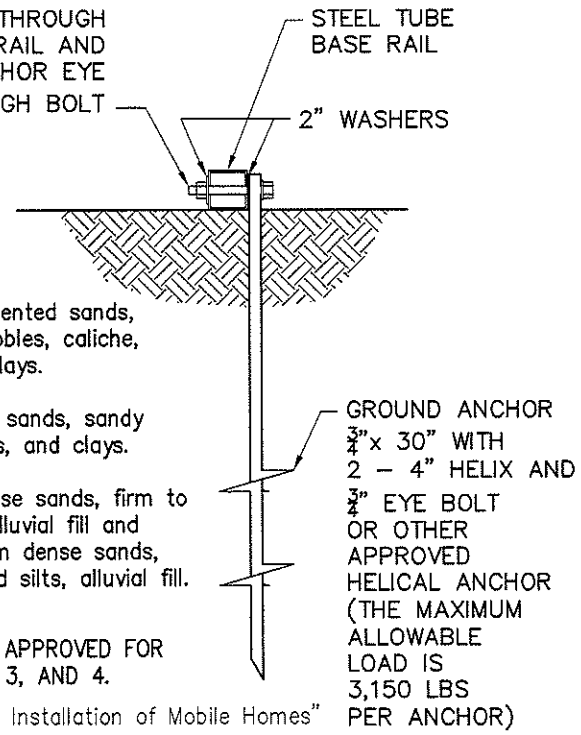

SOIL CLASSIFICATIONS*

SOIL CLASS	SOIL DESCRIPTION
2	Very dense &/or cemented sands, coarse gravel and cobbles, caliche, preloaded silts, and clays.
3	Medium dense coarse sands, sandy gravels, very stiff silts, and clays.
4	Loose to medium dense sands, firm to stiff clays and silts alluvial fill and VERY loose to medium dense sands, firm to stiff clays and silts, alluvial fill.

THE HELICAL ANCHOR SHALL BE APPROVED FOR USE IN SOIL CLASSIFICATIONS 2, 3, AND 4.

* Taken from HUD "Standard for Installation of Mobile Homes"

1/3 SOIL BASE RAIL ANCHOR DETAIL

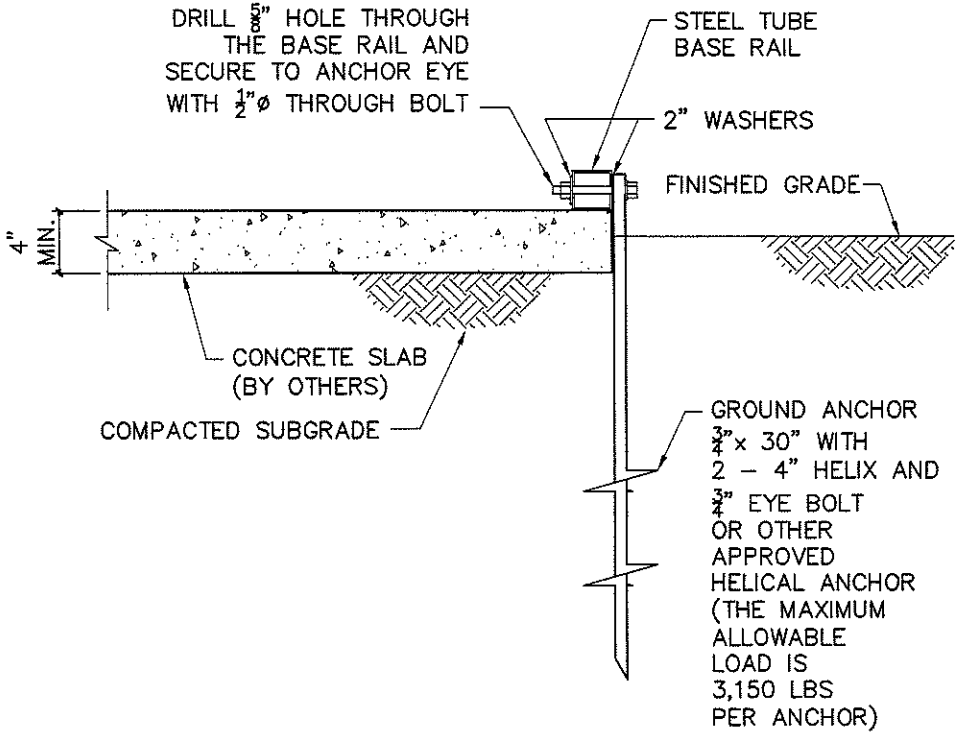

2/3 ALTERNATE BASE RAIL ANCHORAGE

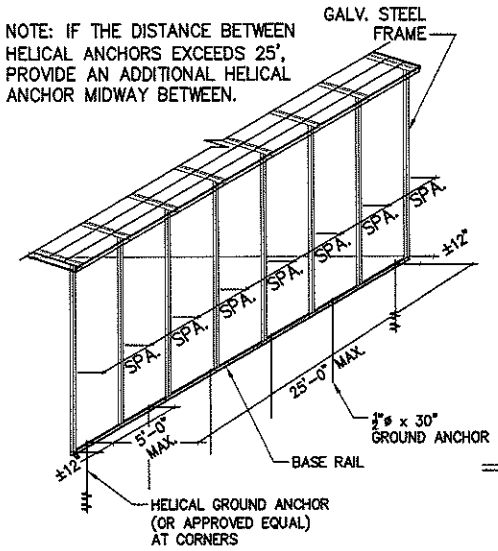

HELICAL GROUND ANCHORS

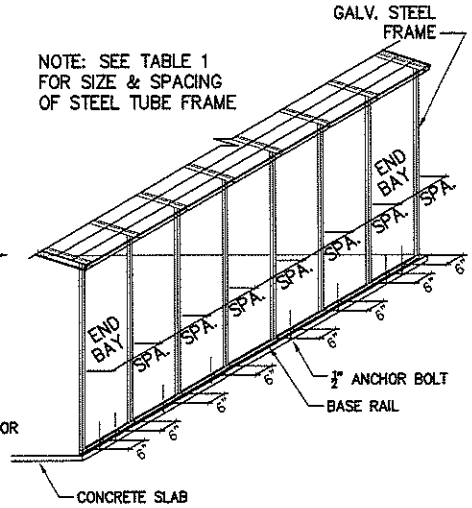

ANCHOR BOLTS

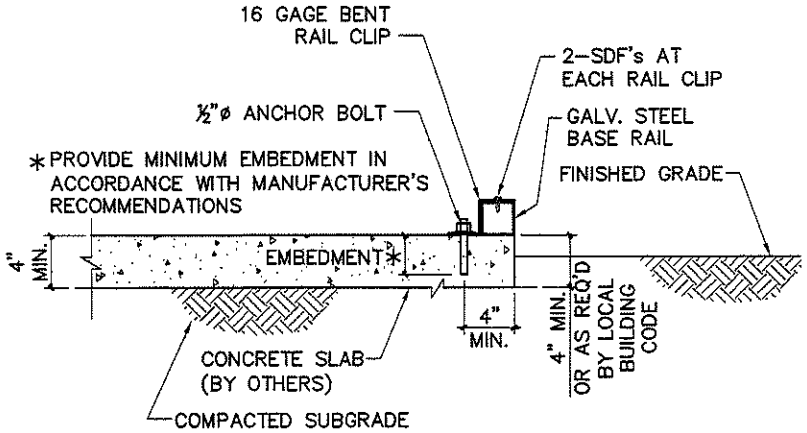

2/3 ALTERNATE BASE RAIL ANCHORAGE

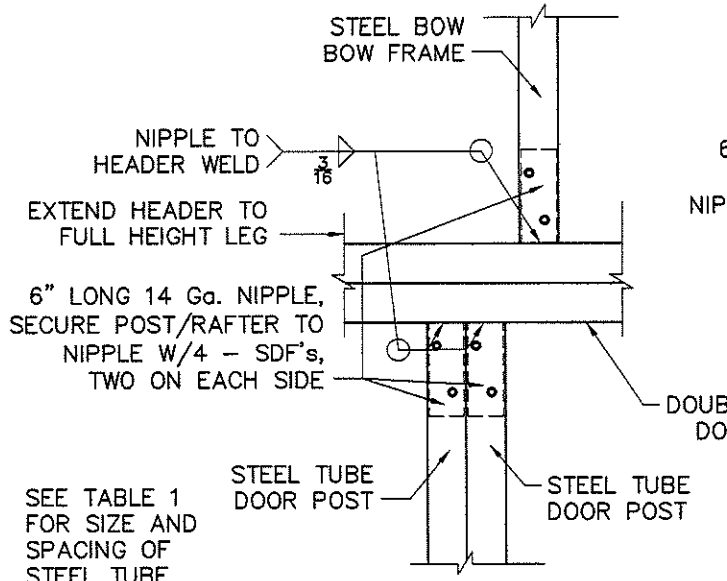

SEE TABLE 1 FOR SIZE AND SPACING OF STEEL TUBE FRAME.

5/5 BOW FRAME/HEADER DETAIL

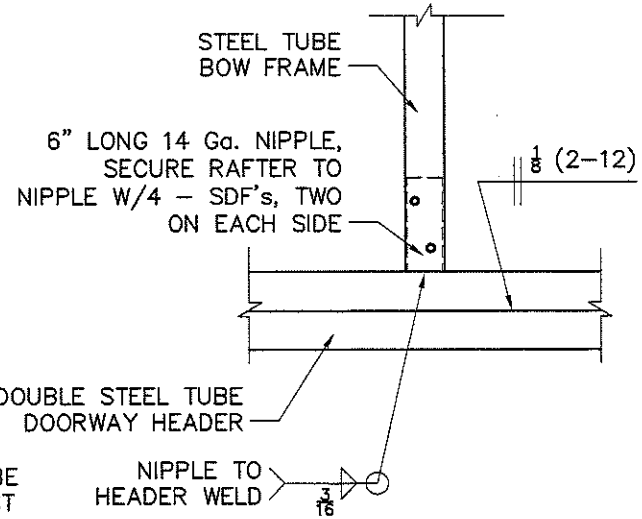

7/5 BOW / HEADER DETAIL

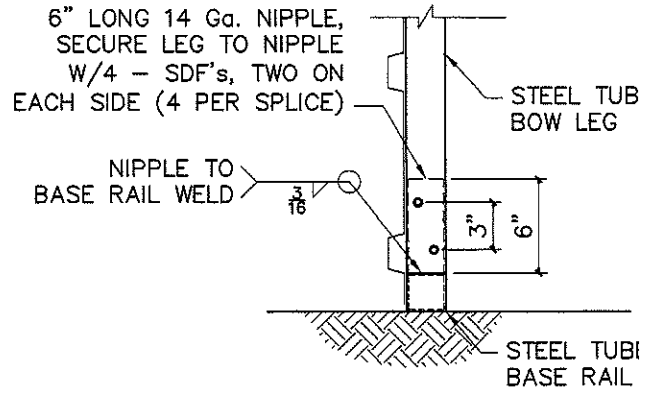

8/5 BOW/BASE RAIL CONNECTION DET

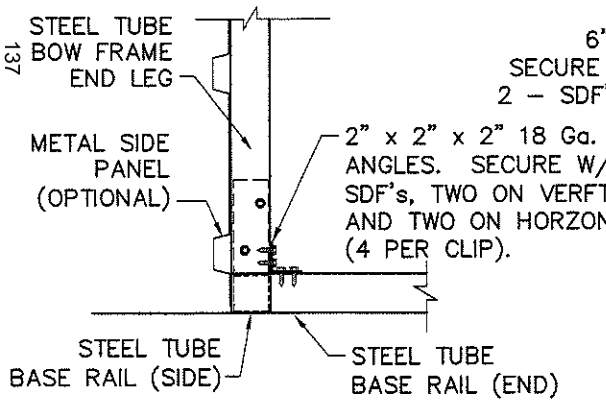

3/5 END BOW/BASE RAIL CONNECTION

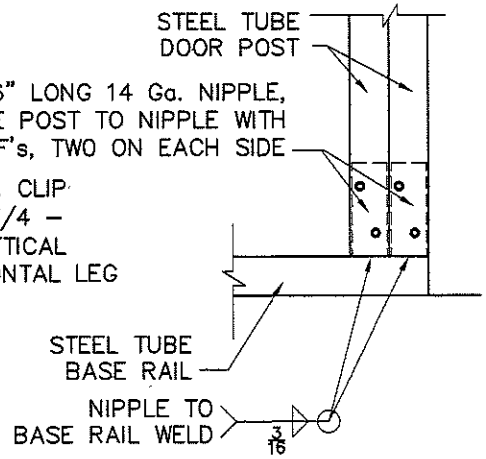

6/5 POST/BASE RAIL DETAIL

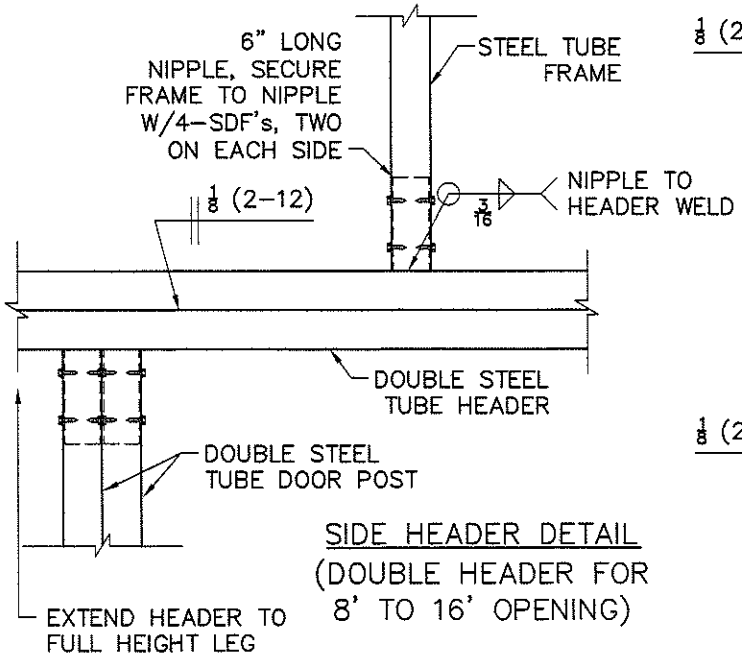

SIDE HEADER DETAIL
(DOUBLE HEADER FOR 8' TO 16' OPENING)

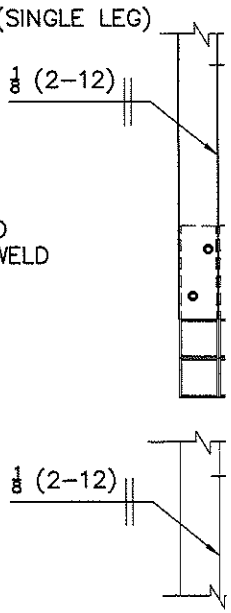

HEADER
(ONE
FOR SIN
TWO H
FOR DO
AND LAI

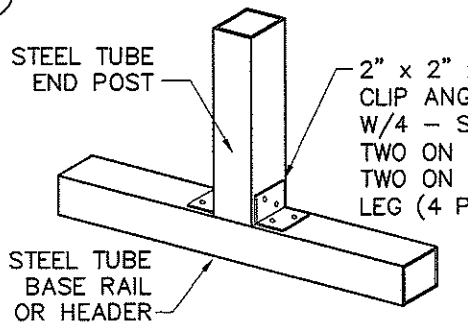

END POST/BASE RAIL

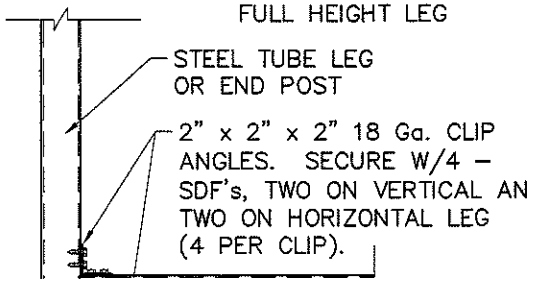

STEEL
BOW R.

EXHIBIT A

LOCATION MAP

Prepared by:
City of Gautier
Planning Department

Legend

- Gautier_Parcels_Clip
- GAUTIER_CITYLIMTS
- Centerlines_Clip

EXHIBIT B

ZONING MAP

Prepared by:
City of Gautier
Planning Department

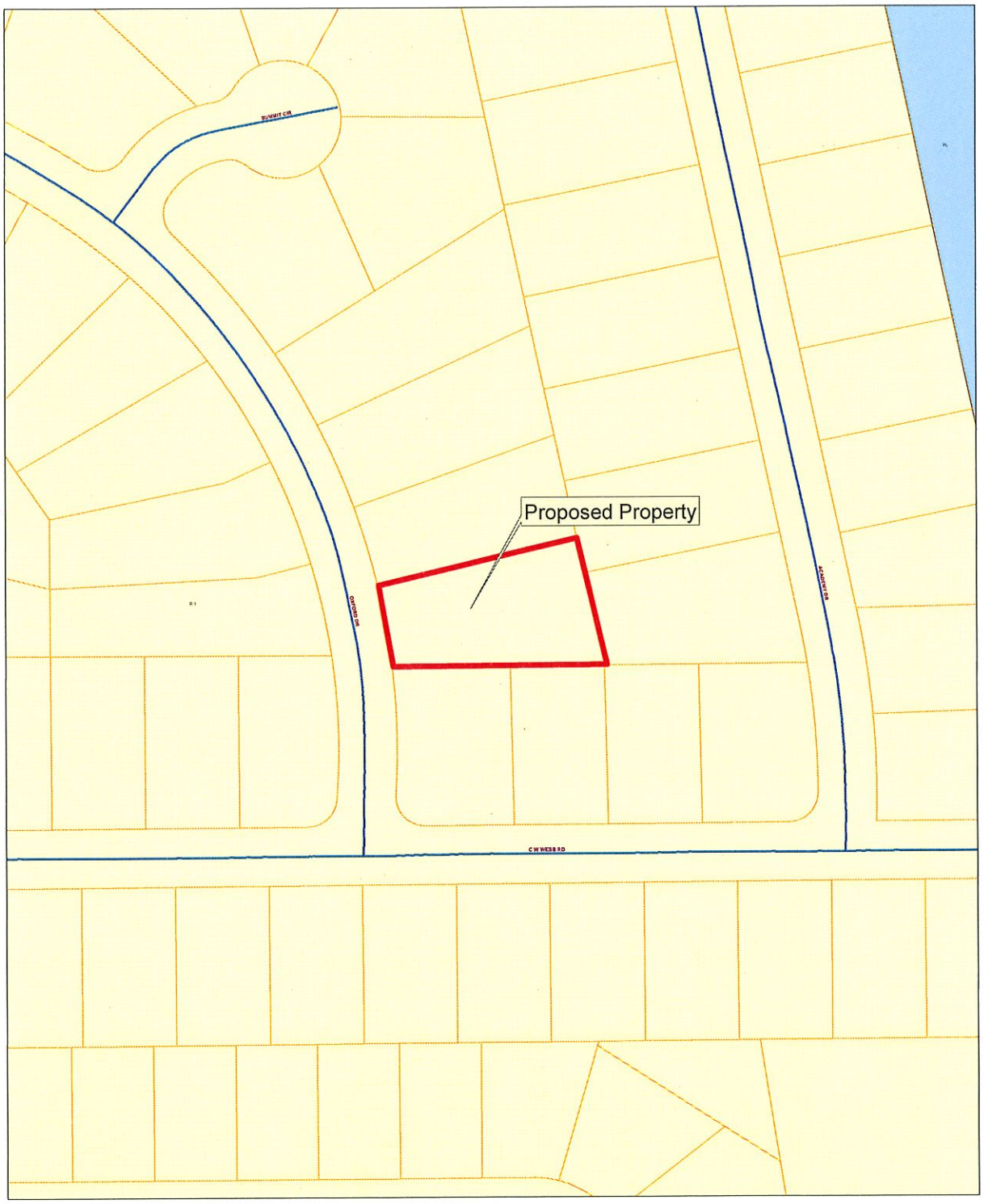

Legend

- Gautier_Parcels_Clip
- GAUTIER_CITYLIMTS
- Centerlines_Clip

Zoning

ZONECODE

- AG
- C-1
- C-2
- C-3
- I-2
- MURC-1
- MURC-2
- MURC-MW
- PL
- PUD
- R-1
- R-2
- R-3
- RE
- TC

EXHIBIT C

EXISTING LAND USE MAP

Prepared by:
City of Gautier
Planning Department

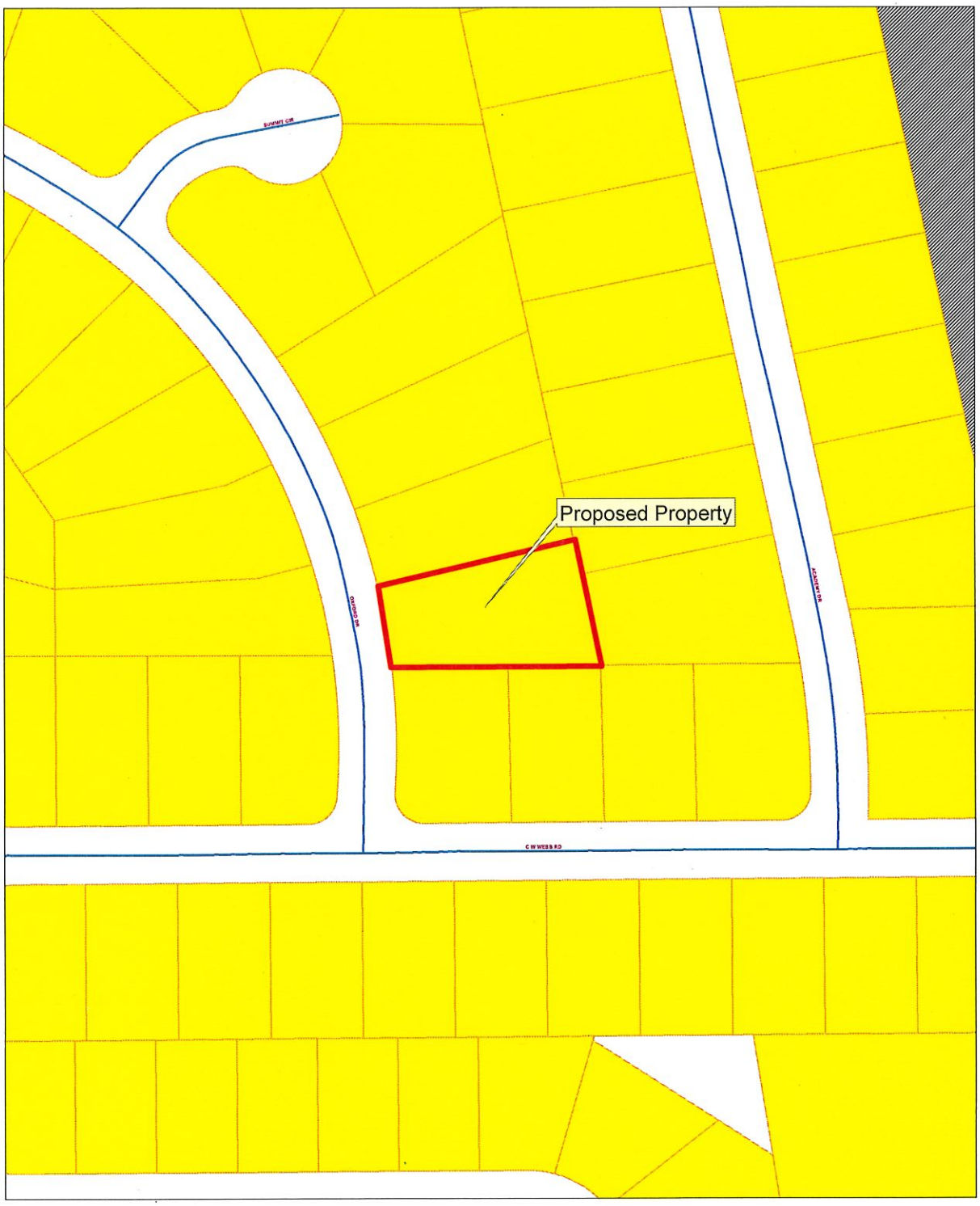

Legend

- Gautier_Parcels_Clip
- GAUTIER_CITYLIMTS
- Centerlines_Clip

EXISTING LAND USE

ELU_08

- commercial-retail
- conservation
- civic
- industrial
- marina/fish camps
- high density residential
- mobile home
- mobile home park
- medium density residential
- office
- recreation
- very low to low density residential
- utility
- vacant

EXHIBIT D

FUTURE LAND USE MAP

Prepared by:
City of Gautier
Planning Department

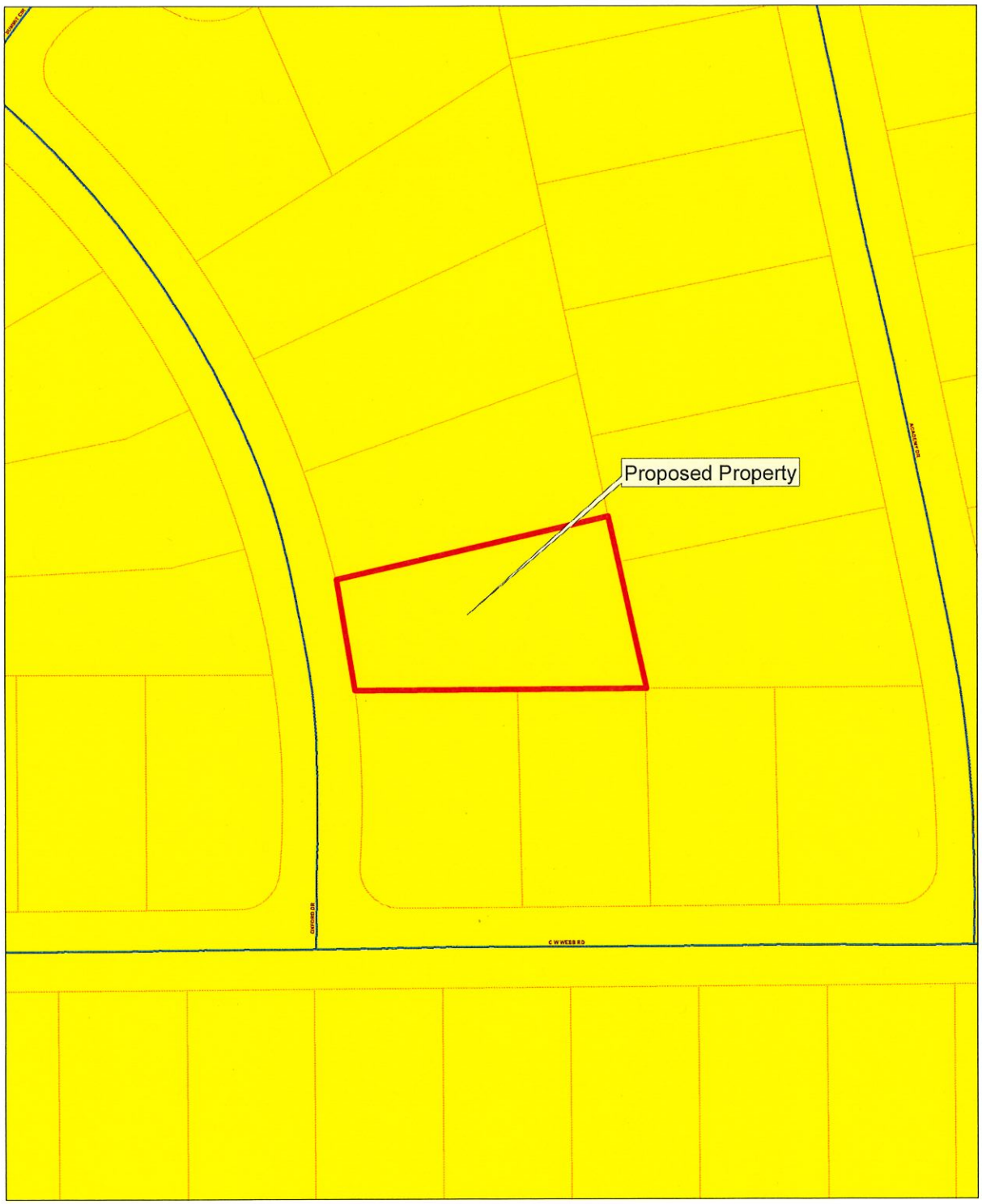

Legend

- Gautier_Parcels_Clip
- GAUTIER_CITYLIMTS
- Centerlines_Clip

FUTURE LAND USE

FLU_Class

- Civic
- high impact commercial
- Conservation
- High Density Residential
- Industrial
- Low Density Residential
- Medium Density Residential
- Mobile Home Residential
- low impact Commercial
- Recreational
- recreational commercial
- Regional Scale Commercial
- mixed use residential
- Town Center
- Very Low Density Residential

Excerpt from December 3, 2020 Planning Commission Meeting:

The Planning Department has received a request from Douglas and LaTonya Kimbrough for a twenty-two foot (22') variance to front yard set-back requirements for an accessory structure in a R-1 Low Density Single-Family Residential Zoning District at 2404 Oxford Drive. (GPC Case No. 20-24-VAR)

Scott Ankerson, Planning Director, gave a brief overview of the case.

REQUEST:

The Planning Department has received a request from Douglas and LaTonya Kimbrough for a twenty two foot (22') variance to front yard set-back requirements for an accessory structure in a R-1 Low Density Single-Family Residential Zoning District. 2404 Oxford Drive, PID #85105548.000. The application fee of $175 was paid on October 22, 2020. All public notice requirements have been met.

BACKGROUND:

The request property is zoned R-1 Low Density Single-Family Residential. The property owners have added an accessory structure in front of their residence without obtaining the proper permit. Measurements made by the City Building Inspector show the accessory structure is located three feet (3') from the front property line. The required front setback is twenty-five feet (25'). The applicant is seeking a Variance of twenty-two feet (22') to minimum front yard setback requirements.

Measurements made by the Building Inspector show the carport to be 20' long and 24' wide and that it begins two feet (2') from the house. The house is located twenty-five feet (25') from the front property line.

DISCUSSION:

The property owners request a variance to the minimum front yard setbacks in a R-1 Low Density Single-Family Residential District from twenty-five feet (25') to three feet (3') to allow a carport that was built without a permit and does not meet front yard minimum requirements for an accessory building.

DETERMINATION OF APPLICABLE LAW:

The Unified Development Ordinance (UDO) defines **Variances** as:

> A Variance is a relaxation of the terms of the Unified Development Ordinance where such Variance will not be contrary to the public interest and where, owing to conditions peculiar to the property, a literal enforcement of the Ordinance would result in an unnecessary or undue hardship. As used in this Ordinance, a Variance is authorized only for height, area and size of structure, or size of yards, separation of uses, open spaces, off-street parking spaces and some subdivision of property.

The establishment or expansion of a use not permitted shall not be allowed by Variance.

The UDO defines **Hardship** as:

Hardship means the unnecessary hardship that would result from a failure to grant the requested variance or special exception. An unnecessary hardship exists if:
(1) the land in question cannot yield a reasonable return if used only
(a) for a purpose allowed in that zone (applicable to special exceptions), or
(b) as permitted by the dimensional requirements of this ordinance (applicable to variances);
(2) that the plight of the owner is due to unique circumstances of the land for which the variance or special exception is sought; and
(3) that the use to be authorized by the variance will not alter the essential character of the locality.

The UDO defines **Setback** as:

SETBACK: (SEE YARD*)* The minimum horizontal distance between the lot or property line and the nearest front, side or rear line of the building as measured to the outside face at the enclosing wall or in structures lacking walls (as in the case of a carport) to the face of the supporting columns and beams. Setback does not include roof overhangs, except that they shall not encroach on more than fifty (50) percent of the required setback.

A. **SETBACK, FRONT:** The yard area extending along the full width of a front lot line between side lot lines and from the front lot line to the front building line in depth.

B. **SETBACK, REAR:** The yard area extending across the full width of the lot and lying between the rear lot line and the nearest line of the building. Rear-yard depth shall be measured at right angles to the rear line of the lot.

C. **SETBACK, SIDE:** The yard area lying between the side line of the lot and the nearest line of the building and extending from the front yard to the rear yard, or in the absence of a front yard or a rear yard, to the front or rear lot lines. Side-yard width shall be measured at right angles to side lines of the lot.

UDO SECTION 4.18: Variance

In certain circumstances, a Variance from the dimensional requirements (i.e. height, setbacks, square footage) of this ordinance may be granted if the applicant can prove that because of physical constraints of the property involved, he is not able to build the same type of structure that other persons with the same zoning classification can build. Variances for uses permitted will not be considered in as much as “use Variances” are not legal in the State of Mississippi.

Most Variances must be granted by the City Council; however, certain minor Variances may be granted by the Economic Development Director in accordance with *Section 4.18.3* below.

4.18.1 Who May Initiate

A request for a Variance may be initiated by the property owner or agent of the owner provided that said property has not been denied a previous request for a Variance for the same property or portion of property within the past twelve (12) months.

4.18.2 Application for Variance

Applications for a Variance (from dimensional requirements) may be filed on the appropriate application available from the Economic Development/Planning Department and shall include all requested information, attachments and submittals:

4.18.3 Administrative Variances

The following dimensional variances may be granted by the Economic Development Director at his/her discretion (Note: Within the COR, Corridor Overlay District, applicants shall be required to mitigate a requested dimensional variance in accordance with the Tier Land Use Provisions in Section 5.11):

A. 30% of required off-street parking spaces and/or

B. 30% of required setbacks from property lines

4.18.4 Criteria for Approval

The Variance application shall demonstrate the following:

A. That special conditions and circumstances exist which are peculiar to this particular site (lot or parcel), structure or building involved and which are not applicable to other sites (lots or parcels) or structures or buildings in the same district;

B. That literal interpretation of the provisions of this Ordinance would deprive the applicant of rights commonly enjoyed by other properties in the same district under the provisions of this Ordinance;

C. That the special conditions and circumstances do not result from actions of the applicant; and

D. That granting the Variance requested will not confer upon the applicant any special privilege that is denied by this Ordinance to other similar sites (lots or parcels) structures or buildings in the same district.

RECOMMENDATION & CONCLUSION:

Staff has been presented with no evidence or information indicating that the variance criteria listed in UDO Article IV Section 4.18.4 A through D have been met. If

recommending approval, Planning Commission shall record a “Finding of Fact” regarding the “Criteria for Approval” from the UDO as listed above.

The Planning Commission may:

1. Recommend that City Council approve variance request as presented;
2. Recommend that City Council approve the variance request with changes; or
3. Recommend that City Council deny variance request.

Chairman Wooten asked the applicants when the carport was built.

Mr. Kimbrough advised that it was built in February of last year.

Commissioner Jamison noted that the carport was conducive to the area.

There were none in attendance speaking in opposition and Staff had received no calls or letters opposing the request.

ACTION TAKEN:

Commissioner Jamison made a motion to recommend Council approve the request because the carport was conducive with the area and that it was nicely built and matched the house.

Chairman Wooten seconded the motion and the following vote was recorded:

AYES: **David Wooten**
Kay C. Jamison
Jimmy Green
Joshua Ward
William Davis
James Lee
Paul Gainer

Motion passed.

Councilwoman Martin made the motion to approve the Docket of Claims, as presented, provided that all entries thereon are true, correct, properly entered and not fraudulent. Mayor Torjusen seconded the motion. The vote was carried unanimously.

There came for consideration of the Mayor and Members of the Council of the City of Gautier, Mississippi, the following:

ORDER NUMBER 501-2020

WHEREAS, Miss. Code Ann. 21-39-9 requires governing authority to review all unpaid claims and determine if there is an obligation. An obligation exists if the related materials and supplies were properly contracted for and received by the municipality; and

IT IS HEREBY ORDERED by the Mayor and Members of the Council of the City of Gautier, Mississippi, that Docket of Claims is hereby approved, provided that all entries thereon are true, correct, properly entered and not fraudulent.

IT IS FURTHER ORDERED that the City Manager or City Clerk is authorized to execute any and all documents necessary.

Motion was made by **Councilwoman Martin,** seconded by **Mayor Torjusen,** and the following vote was recorded:

AYES: **Phil Torjusen**
Mary Martin
Cameron George
Richard Jackson
Casey Vaughan
Rusty Anderson
Adam Colledge

NAYS: **None**

_____
MAYOR

ATTEST:

_____
CITY CLERK

Passed and Adopted by Mayor and Members of the Council of the City of Gautier, Mississippi, at the meeting of December 15, 2020.

Docket of Claims
Release date from 12/15/2020 thru 12/15/2020

Fund	Name of Claimant	Trans #	Release Date	Claim Date	Claim Number	Check Number	Claim Amount	Approved/Disapproved
001	SOUTHERN PEST CONTROL INC	210538	12/15/2020	11/24/2020			403.30	
	Account Number / Description			Invoice #	Date	P.O.	Amount	
	001-092-698 / CITY FACILITIES			17 100379022	11/23/2020			403.30
001	SECURE NETWORKS LLC	210539	12/15/2020	11/24/2020			2,280.00	
	Account Number / Description			Invoice #	Date	P.O.	Amount	
	001-092-698 / JAN 2021 NETWORK SERVICES			4362	11/14/2020			2,280.00
001	AT&T	210542	12/15/2020	11/25/2020			3,239.96	
	Account Number / Description			Invoice #	Date	P.O.	Amount	
	001-092-605 / MONTHLY SERVICE			2284978000	11/14/2020			3,239.96
001	AT&T	210543	12/15/2020	11/25/2020			38.19	
	Account Number / Description			Invoice #	Date	P.O.	Amount	
	001-100-699 / NCIC TELECOM			2284970262	11/14/2020			38.19
001	AT&T	210544	12/15/2020	11/25/2020			165.01	
	Account Number / Description			Invoice #	Date	P.O.	Amount	
	001-092-605 / MONTHLY SERVICE			2284977070	11/14/2020			165.01
001	SPARKLIGHT	210546	12/15/2020	11/30/2020			72.64	
	Account Number / Description			Invoice #	Date	P.O.	Amount	
	001-161-698 / DEC 2020: NFD #122024383			11162020	11/23/2020			72.64
001	SPARKLIGHT	210547	12/15/2020	11/30/2020			72.64	
	Account Number / Description			Invoice #	Date	P.O.	Amount	
	001-161-698 / DEC 2020: SFD #122025091			11162020	11/23/2020			72.64
001	SPARKLIGHT	210548	12/15/2020	11/30/2020			72.64	
	Account Number / Description			Invoice #	Date	P.O.	Amount	
	001-161-698 / DEC 2020: CFD #122024086			11162020	11/23/2020			72.64
001	AT&T	210549	12/15/2020	11/30/2020			334.46	
	Account Number / Description			Invoice #	Date	P.O.	Amount	
	001-092-605 / MONTHLY SERVICE			2284972172	11/14/2020			334.46
001	DELTA COMPUTER SYSTEMS INC	210581	12/15/2020	12/01/2020			541.00	
	Account Number / Description			Invoice #	Date	P.O.	Amount	
	001-092-698 / DEC 2020 ACCT SOFTWARE MAINT			MN141367	11/15/2020			370.00
	001-092-698 / DEC 2020 PRIV LIC SW MAINT			MN141368	11/15/2020			150.00
	001-092-698 / DEC 2020 VOTER REG SW MAINT			MNHR003158	11/15/2020			21.00
001	O'REILLY AUTO PARTS	210584	12/15/2020	12/01/2020			587.17	
	Account Number / Description			Invoice #	Date	P.O.	Amount	
	001-100-570 / NON-BRKT CAL,CORE CHG:U# 15314			1978186991	11/05/2020			115.57
	001-100-570 / CR RTN: CORE EXC U #15314			1978186991	11/05/2020			-43.00
	001-100-570 / ORIFICE TUBE, FREON: U #15314			1978186991	11/05/2020			14.81
	001-170-639 / BATT, CORE CHG: EXCAVATOR			1978187408	11/09/2020			119.20
	001-170-639 / CR RTN: CORE EXC EXCAVATOR			1978187408	11/09/2020			-18.00
	001-161-638 / H-SUPPORT(2):R33,1GAL CAR WASH			1978187409	11/09/2020			46.59

Docket of Claims
Release date from 12/15/2020 thru 12/15/2020

Fund	Name of Claimant	Trans #	Release Date	Claim Date	Claim Number	Check Number	Claim Amount	Approved/Disapproved
001	O'REILLY AUTO PARTS	210584	12/15/2020	12/01/2020			587.17	(CONTINUED)

Account Number	Description	Invoice #	Date	P.O.	Amount
001-161-638	WIPER BLADE (2), HEADLIGHT	1978187533	11/10/2020		76.06
001-161-638	HEADLIGHT: S48	1978187606	11/10/2020		9.70
001-100-570	RADIATOR: U #19686	1978187725	11/12/2020		174.76
001-100-570	HTR HOSE ASSY (2): U #11277	1978187726	11/12/2020		106.35
001-161-638	CR RTN: HEADLIGHT	1978188152	11/16/2020		-24.82
001-170-639	COPPER PLUG	1978188483	11/19/2020		2.99
001-100-570	HEADLIGHT: U #59	1978189333	11/27/2020		6.96

Fund	Name of Claimant	Trans #	Release Date	Claim Date	Claim Number	Check Number	Claim Amount	Approved/Disapproved
001	MSC 7511	210585	12/15/2020	12/01/2020			558.24	_____

Account Number	Description	Invoice #	Date	P.O.	Amount
001-092-698	MPC8003SP USAGE: B/W	INV3958147	11/19/2020		128.82
001-092-698	MPC8003SP USAGE: COLOR	INV3958147	11/19/2020		175.66
001-090-698	C4502 USAGE: COLOR	INV3958147	11/19/2020		253.76

Fund	Name of Claimant	Trans #	Release Date	Claim Date	Claim Number	Check Number	Claim Amount	Approved/Disapproved
001	MSC 7511	210586	12/15/2020	12/01/2020			212.45	_____

Account Number	Description	Invoice #	Date	P.O.	Amount
001-100-699	FNK100-01 RENTAL FEE	INV3949377	11/16/2020		169.58
001-100-699	MPC2504EX USAGE: COLOR	INV3949377	11/16/2020		42.87

Fund	Name of Claimant	Trans #	Release Date	Claim Date	Claim Number	Check Number	Claim Amount	Approved/Disapproved
001	MSC 7511	210587	12/15/2020	12/01/2020			113.14	_____

Account Number	Description	Invoice #	Date	P.O.	Amount
001-161-698	GEMG00-01 RENTAL FEE	INV3956593	11/19/2020		113.14

Fund	Name of Claimant	Trans #	Release Date	Claim Date	Claim Number	Check Number	Claim Amount	Approved/Disapproved
001	SINGING RIVER ELECTRIC COOPERATIVE	210589	12/15/2020	12/01/2020			671.05	_____

Account Number	Description	Invoice #	Date	P.O.	Amount
001-161-631	BROWN FD 95237002	11152020	11/20/2020		284.05
001-161-631	MARTIN BLUFF FD 58380001	11172020	11/23/2020		223.59
001-201-629	SIGNAL LIGHTS 17546	11172020	11/23/2020		33.39
001-092-631	CITY LIMIT SIGN 17546	11172020	11/23/2020		27.28
001-100-631	MBLUFF SUB STN 58521002	11172020	11/23/2020		102.74

Fund	Name of Claimant	Trans #	Release Date	Claim Date	Claim Number	Check Number	Claim Amount	Approved/Disapproved
001	SINGING RIVER ELECTRIC COOPERATIVE	210590	12/15/2020	12/01/2020			2,226.41	_____

Account Number	Description	Invoice #	Date	P.O.	Amount
001-100-631	POLICE STATION 66298004	11182020	11/24/2020		1,397.86
001-201-629	SIGNAL LIGHT 89113001	11182020	11/24/2020		52.47
001-170-631	CITY PARK RESTRMS 89912001	11182020	11/24/2020		442.95
001-201-633	STREET LIGHTS 90345002	11182020	11/24/2020		134.16
001-092-631	RECORDS BLDG 90790001	11182020	11/24/2020		132.38
001-170-631	FRAZIER RESTRMS 98546001	11182020	11/24/2020		66.59

Fund	Name of Claimant	Trans #	Release Date	Claim Date	Claim Number	Check Number	Claim Amount	Approved/Disapproved
001	SINGING RIVER ELECTRIC COOPERATIVE	210591	12/15/2020	12/01/2020			148.23	_____

Account Number	Description	Invoice #	Date	P.O.	Amount
001-170-631	SPORTS PAVILION 66582005	11182020	11/24/2020		95.47
001-170-631	ROUNDABOUT 102311002	11182020	11/24/2020		25.00
001-170-631	FITNESS TRAIL 109268001	11182020	11/24/2020		27.76

Fund	Name of Claimant	Trans #	Release Date	Claim Date	Claim Number	Check Number	Claim Amount	Approved/Disapproved
001	SINGING RIVER ELECTRIC COOPERATIVE	210592	12/15/2020	12/01/2020			798.15	_____

Account Number	Description	Invoice #	Date	P.O.	Amount
001-201-633	DOLPHIN ST 94987002	11182020	11/24/2020		60.37
001-201-633	DOLPHIN ST 94988002	11182020	11/24/2020		65.60
001-201-633	DOLPHIN ST 94989002	11182020	11/24/2020		52.35

Docket of Claims
Release date from 12/15/2020 thru 12/15/2020

Fund	Name of Claimant	Trans #	Release Date	Claim Date	Claim Number	Check Number	Claim Amount	Approved/Disapproved
001	SINGING RIVER ELECTRIC COOPERATIVE	210592	12/15/2020	12/01/2020			798.15	(CONTINUED)

Account Number	Description	Invoice #	Date	P.O.	Amount
001-201-633	DOLPHIN ST 94990002	11182020	11/24/2020		471.44
001-201-633	WM PAYNE 100244001	11182020	11/24/2020		61.15
001-201-633	WM PAYNE 100245001	11182020	11/24/2020		87.24

Fund	Name of Claimant	Trans #	Release Date	Claim Date	Claim Number	Check Number	Claim Amount	Approved/Disapproved
001	BORDIS & DANOS PLLC	210594	12/15/2020	12/02/2020			10,000.00	

Account Number	Description	Invoice #	Date	P.O.	Amount
001-060-602	DEC 2020-RETAINER	90	12/01/2020		10,000.00

Fund	Name of Claimant	Trans #	Release Date	Claim Date	Claim Number	Check Number	Claim Amount	Approved/Disapproved
001	EVOARMOR LLC	210595	12/15/2020	12/02/2020			7,420.00	

Account Number	Description	Invoice #	Date	P.O.	Amount
001-092-698	DISINFECT/ANTIMICRO FACILITIES	1034	11/25/2020		5,760.00
001-092-698	DISINFECT/ANTIMICRO PSVEHICLES	1034	11/25/2020		1,220.00
001-092-698	DISINFECT/ANTIMICRO VEHICLES	1034	11/25/2020		440.00

Fund	Name of Claimant	Trans #	Release Date	Claim Date	Claim Number	Check Number	Claim Amount	Approved/Disapproved
001	SINGING RIVER ELECTRIC COOPERATIVE	210596	12/15/2020	12/02/2020			866.85	

Account Number	Description	Invoice #	Date	P.O.	Amount
001-161-631	SOUTH FD 76008001	11192020	11/25/2020		290.24
001-170-631	BACOT PARK 10137	11192020	11/25/2020		423.75
001-201-629	SIGNAL LIGHTS 10138	11192020	11/25/2020		127.86
001-170-631	BACOT SPLASHPAD 103751001	11192020	11/25/2020		25.00

Fund	Name of Claimant	Trans #	Release Date	Claim Date	Claim Number	Check Number	Claim Amount	Approved/Disapproved
001	SINGING RIVER ELECTRIC COOPERATIVE	210597	12/15/2020	12/02/2020			8,289.28	

Account Number	Description	Invoice #	Date	P.O.	Amount
001-201-633	STREET LIGHTING 10054	11182020	11/24/2020		6,002.93
001-201-629	SIGNAL LIGHTS 10054	11182020	11/24/2020		639.24
001-092-631	CITY HALL 10054	11182020	11/24/2020		690.44
001-170-631	FRAZIER PARK 10054	11182020	11/24/2020		52.28
001-170-631	SENIOR BLDG 10054	11182020	11/24/2020		98.30
001-161-631	CENTRAL FD 10054	11182020	11/24/2020		393.18
001-170-631	CITY PARK 10054	11182020	11/24/2020		118.38
001-092-631	PUBLIC WORKS 10054	11182020	11/24/2020		267.55
001-092-631	HWY 90 SIGN 10054	11182020	11/24/2020		26.98

Fund	Name of Claimant	Trans #	Release Date	Claim Date	Claim Number	Check Number	Claim Amount	Approved/Disapproved
001	FUELMAN	210605	12/15/2020	12/02/2020			1,765.90	

Account Number	Description	Invoice #	Date	P.O.	Amount
001-100-525	UNL FUEL	NP59201240	11/30/2020		1,412.02
001-161-525	UNL&DSL FUEL	NP59201240	11/30/2020		227.20
001-170-525	UNL FUEL	NP59201240	11/30/2020		85.73
001-205-525	UNL FUEL	NP59201240	11/30/2020		40.95

Fund	Name of Claimant	Trans #	Release Date	Claim Date	Claim Number	Check Number	Claim Amount	Approved/Disapproved
001	BELL AUTO PARTS INC	210608	12/15/2020	12/02/2020			365.45	

Account Number	Description	Invoice #	Date	P.O.	Amount
001-170-639	NOZZLE (4), PUMP (2),S-WAND(2)	D058398	11/10/2020		283.20
001-170-639	CARBURETOR,GASKET,SPACER GSKT	D058414	11/19/2020		82.25

Fund	Name of Claimant	Trans #	Release Date	Claim Date	Claim Number	Check Number	Claim Amount	Approved/Disapproved
001	JACKSON COUNTY ADULT DETENTION CENTER	210609	12/15/2020	12/03/2020			1,960.00	

Account Number	Description	Invoice #	Date	P.O.	Amount
001-010-696	NOV 2020 ADC CHGS	11302020	12/03/2020		1,960.00

Docket of Claims
Release date from 12/15/2020 thru 12/15/2020

Fund	Name of Claimant	Trans #	Release Date	Claim Date	Claim Number	Check Number	Claim Amount	Approved/Disapproved
001	LOWES HOME CENTERS INC	210611	12/15/2020	12/03/2020			1,055.29	

Account Number	Description	Invoice #	Date	P.O.	Amount
001-161-635	22 PINT DEHUMIDIFIER	918082	10/30/2020		179.55
001-161-510	8 ROLL PAPER TOWEL (4)	902614	10/30/2020		49.32
001-161-510	16PK AA BATT	902614	10/30/2020		13.29
001-161-559	WALL CHARGER	910711	10/31/2020		14.23
001-161-638	CAR ADAPTER: E4	910711	10/31/2020		9.47
001-161-639	DISC LOCK: MOWER	902117	10/31/2020		25.62
001-161-635	3CT AC FILTER (2)	909837	11/02/2020		18.02
001-161-639	E-CLIP 5/16IN: CHAINSAW	911607	11/02/2020		1.37
001-161-559	CHARBROIL 4PC TOOL SET	901687	11/25/2020		33.24
001-161-559	COOL CLN NYLON BRISTLE BRUSH	901687	11/25/2020		14.23
001-161-639	TOW COUPLER LOCK: TRAILER	901972	11/05/2020		23.73
001-161-510	16.9OZ HAND SANITIZER	901972	11/05/2020		18.90
001-161-639	E-CLIP 3/8IN: CHAINSAW	901972	11/05/2020		1.38
001-090-559	PT HOLDER, WALL PROTECTOR	901866	11/05/2020		14.97
001-090-559	TISSUE HOLDER	901866	11/05/2020		19.01
001-205-560	3PC BRUSH,100CT ROOF SCREWS	902899	11/05/2020		22.76
001-205-560	GE SIL CAULK CLEAR (3)	902899	11/05/2020		19.32
001-161-559	FURNITURE DOLLY (2)	902940	11/06/2020		41.76
001-170-577	REPR BLEACHERS: BUDDY DAVIS	902426	11/09/2020		84.00
001-170-577	REPR BLEACHERS: BUDDY DAVIS	901937	11/10/2020		12.71
001-170-559	TENSION WIRE 10LB (2)	920374	11/13/2020		51.26
001-161-638	WASHERS, 12CT #6 MAC SCREWS	902816	11/17/2020		7.85
001-092-635	124OZ INT PAINT, PAINT OPENER	902713	11/17/2020		36.64
001-092-635	PUTTY KNIFE, 8OZ SPACKLING	901368	11/17/2020		11.94
001-170-559	CRAFTSMAN WHEELBARROW	919497	11/18/2020		85.49
001-205-559	KOBALT 14IN IRON WRENCH	901837	11/19/2020		18.99
001-161-635	UTIL WATER HEATER ELEMENT (2)	910885	11/19/2020		35.50
001-205-560	3 WIRE PLUG (7)	901648	11/23/2020		26.39
001-170-559	C-TIE (6), FIRE ANT KILLER (5)	911954	11/23/2020		108.53
001-170-559	DW SAW BLADES (2)	910459	11/23/2020		18.02
001-161-559	32CT BOTTLED WATER (10)	902873	11/24/2020		37.80

Fund	Name of Claimant	Trans #	Release Date	Claim Date	Claim Number	Check Number	Claim Amount	Approved/Disapproved
001	MS DEPT OF FINANCE & ADMIN	210613	12/15/2020	12/03/2020			15,946.75	

Account Number	Description	Invoice #	Date	P.O.	Amount
001-000-300	NOV 2020 COURT ASSESSMENTS	11302020	12/01/2020		15,946.75

Fund	Name of Claimant	Trans #	Release Date	Claim Date	Claim Number	Check Number	Claim Amount	Approved/Disapproved
001	MS DEPT OF PUBLIC SAFETY	210614	12/15/2020	12/03/2020			1,186.00	

Account Number	Description	Invoice #	Date	P.O.	Amount
001-000-300	NOV 2020 SPECIAL ASSESSMENTS	11302020	12/01/2020		1,186.00

Fund	Name of Claimant	Trans #	Release Date	Claim Date	Claim Number	Check Number	Claim Amount	Approved/Disapproved
001	MS DEPT OF PUBLIC SAFETY	210615	12/15/2020	12/03/2020			300.00	

Account Number	Description	Invoice #	Date	P.O.	Amount
001-000-300	NOV 2020 INTERLOCK FEES	11302020	12/01/2020		300.00

Fund	Name of Claimant	Trans #	Release Date	Claim Date	Claim Number	Check Number	Claim Amount	Approved/Disapproved
001	CARDMEMBER SERVICES	210616	12/15/2020	12/03/2020			1,149.63	

Account Number	Description	Invoice #	Date	P.O.	Amount
001-100-559	BOAT REGISTRATION: 2010 COBIA	10232020	10/21/2020		25.20
001-170-511	SR EVENT: MUGS/TISSUES	10282020	10/26/2020		176.16

Docket of Claims
Release date from 12/15/2020 thru 12/15/2020

Fund	Name of Claimant	Trans #	Release Date	Claim Date	Claim Number	Check Number	Claim Amount	Approved/Disapproved
001	CARDMEMBER SERVICES	210616	12/15/2020	12/03/2020			1,149.63	(CONTINUED)

Account Number	Description	Invoice #	Date	P.O.	Amount
001-100-559	H ZETA SUPPLIES: PD	10292020	10/28/2020		98.14
001-090-682	ASFPM DUES: ALEXANDER	11052020	11/04/2020		165.00
001-090-682	ASFPM DUES: ANKERSON	11052020	11/04/2020		165.00
001-170-511	SR EVENT: CRACKERS	11102020	11/09/2020		12.75
001-092-698	RENEW SAMS CLUB	11122020	11/10/2020		45.00
001-170-511	SR EVENT: COOKIES/SOUP	11122020	11/10/2020		125.76
001-170-559	ALUMINUM LEVEL	11132020	11/12/2020		9.99
001-170-559	CEMENT MIXER	11132020	11/12/2020		209.99
001-092-510	4PK LYSOL SPRAY(2)	11192020	11/18/2020		116.64

Fund	Name of Claimant	Trans #	Release Date	Claim Date	Claim Number	Check Number	Claim Amount	Approved/Disapproved
001	ACE DATA STORAGE INC	210625	12/15/2020	12/04/2020			105.00	

Account Number	Description	Invoice #	Date	P.O.	Amount
001-100-699	NOV 2020-SHREDDING SERVICE	75068	12/01/2020		105.00

Fund	Name of Claimant	Trans #	Release Date	Claim Date	Claim Number	Check Number	Claim Amount	Approved/Disapproved
001	AUTO TRUCK AND TRAILER PARTS INC	210627	12/15/2020	12/04/2020			2,933.07	

Account Number	Description	Invoice #	Date	P.O.	Amount
001-161-638	BATT: R33	285897	11/04/2020		136.00
001-161-638	BATT: R33	285898	11/04/2020		136.00
001-161-638	SWITCH: E3	285925	11/05/2020		110.00
001-161-638	BRAKE SWITCH: E3	285933	11/05/2020		60.00
001-100-570	ROTOR (2), BRAKE PAD: U #16223	285871	11/06/2020		162.18
001-100-570	BATT: BLACK CHARGER	285879	11/06/2020		169.00
001-100-570	BRAKE PADS: POLICE VEH	285856	11/06/2020		52.16
001-100-570	ROTOR (2): POLICE VEH	285857	11/06/2020		116.02
001-100-570	ROTOR (2), PAD: POLICE VEH	285872	11/06/2020		162.18
001-100-570	HEADLIGHT: U #16808	285962	11/06/2020		127.01
001-161-638	1GAL ROTELLA 15W40 (3)	286004	11/09/2020		49.50
001-170-639	LIGHT (2): TRAILER	286008	11/10/2020		25.00
001-161-638	LIGHT (4): E3	286037	11/10/2020		45.40
001-170-639	COTTER PIN ASRT	286081	11/12/2020		10.87
001-170-639	BLACK SILICONE (2)	286088	11/12/2020		10.10
001-100-570	AIR FITTING, HUB: U #13408	286102	11/13/2020		176.33
001-170-639	BOLTS (6), NUTS (6)	286119	11/13/2020		11.40
001-170-638	TRI-BALL, PIN: REC TRUCK	286122	11/13/2020		36.00
001-161-638	CONTROL: E3	286124	11/13/2020		170.00
001-161-638	CAB MOTOR: E3	286125	11/13/2020		150.00
001-161-638	FILTER: E2	286134	11/13/2020		113.95
001-161-638	FITTING (2): E2	286161	11/17/2020		6.94
001-100-570	WHEEL BEARING: U #13408	286162	11/17/2020		12.66
001-161-638	SS HOSE: E2	286187	11/18/2020		175.00
001-161-638	PIG TAIL: E2	286212	11/19/2020		37.71
001-100-570	ANTIFREZ (6)	286214	11/19/2020		85.62
001-161-638	DEGREASER (2): E5	286218	11/19/2020		19.40
001-161-638	N/O SWITCH: E2	2862221	11/19/2020		12.35
001-100-570	BRASS, AIR COMPR:PD COMM UNIT	286232	11/20/2020		27.15
001-161-638	LADDER MOUNT, LIGHT LENS: E2	286275	11/23/2020		472.00
001-170-639	TRAILER JACK, SWITCH	286297	11/24/2020		55.14

Docket of Claims
Release date from 12/15/2020 thru 12/15/2020

Fund	Name of Claimant	Trans #	Release Date	Claim Date	Claim Number	Check Number	Claim Amount	Approved/Disapproved
001	MS MUNICIPAL LEAGUE	210628	12/15/2020	12/04/2020			810.00	

Account Number	Description	Invoice #	Date	P.O.	Amount
001-001-681	MID WINTER CONF: ANDERSON,C	32150	11/20/2020		135.00
001-001-681	MID WINTER CONF: COLLEDGE,A	32150	11/20/2020		135.00
001-001-681	MID WINTER CONF: MARTIN,M	32150	11/20/2020		135.00
001-001-681	MID WINTER CONF: VAUGHAN,C	32150	11/20/2020		135.00
001-001-681	MID WINTER CONF: JACKSON,R	32150	11/20/2020		135.00
001-001-681	MID WINTER CONF: TORJUSEN,P	32150	11/20/2020		135.00

Fund	Name of Claimant	Trans #	Release Date	Claim Date	Claim Number	Check Number	Claim Amount	Approved/Disapproved
001	LOCAL GOVERNMENT SERVICES LLC	210629	12/15/2020	12/04/2020			343.75	

Account Number	Description	Invoice #	Date	P.O.	Amount
001-021-601	FF SERVS: CENTERPOINT	1897	11/23/2020		343.75

Fund	Name of Claimant	Trans #	Release Date	Claim Date	Claim Number	Check Number	Claim Amount	Approved/Disapproved
001	SEYMOUR ENGINEERING PLLC	210630	12/15/2020	12/04/2020			900.00	

Account Number	Description	Invoice #	Date	P.O.	Amount
001-090-608	PLAN REVIEW: CAJUN CAR WASH	7846	12/03/2020		900.00

Fund	Name of Claimant	Trans #	Release Date	Claim Date	Claim Number	Check Number	Claim Amount	Approved/Disapproved
001	DIRECTV LLC	210631	12/15/2020	12/04/2020			160.00	

Account Number	Description	Invoice #	Date	P.O.	Amount
001-161-698	WEST STN: 022727663 (JAN)	12132020	12/14/2020		160.00

Fund	Name of Claimant	Trans #	Release Date	Claim Date	Claim Number	Check Number	Claim Amount	Approved/Disapproved
001	ELEKTRA TECH ENTERTAINMENT	210632	12/15/2020	12/04/2020			750.00	

Account Number	Description	Invoice #	Date	P.O.	Amount
001-170-513	LIGHTS & LAGNIAPPE:SOUND/VIDEO	12052020	12/03/2020		750.00

Fund	Name of Claimant	Trans #	Release Date	Claim Date	Claim Number	Check Number	Claim Amount	Approved/Disapproved
001	SWETMAN SECURITY SERVICE INC	210633	12/15/2020	12/04/2020			620.00	

Account Number	Description	Invoice #	Date	P.O.	Amount
001-170-513	LIGHTS & LAGNIAPPE: SECURITY	14197	12/01/2020		620.00

Fund	Name of Claimant	Trans #	Release Date	Claim Date	Claim Number	Check Number	Claim Amount	Approved/Disapproved
001	PYRO SHOWS INC	210634	12/15/2020	12/07/2020			4,200.00	

Account Number	Description	Invoice #	Date	P.O.	Amount
001-170-596	CHRISTMAS LIGHT THE NIGHT SHOW	15514	12/07/2020		4,200.00

Fund	Name of Claimant	Trans #	Release Date	Claim Date	Claim Number	Check Number	Claim Amount	Approved/Disapproved
001	ALABAMA MEDIA GROUP	210636	12/15/2020	12/07/2020			34.56	

Account Number	Description	Invoice #	Date	P.O.	Amount
001-090-615	PUBLIC NOTICE: GPC 20-23-VAR	0009792912	11/18/2020	210169	16.92
001-090-615	PUBLIC NOTICE: GPC 20-24-VAR	0009792917	11/18/2020	210169	17.64

Fund	Name of Claimant	Trans #	Release Date	Claim Date	Claim Number	Check Number	Claim Amount	Approved/Disapproved
001	MALLETTE BROTHERS CONSTRUCTION INC	210637	12/15/2020	12/07/2020			4,998.85	

Account Number	Description	Invoice #	Date	P.O.	Amount
001-100-720	CLEAN STRIPE SEAL: PD PKG LOT	21972	11/30/2020	210004	4,998.85

Fund	Name of Claimant	Trans #	Release Date	Claim Date	Claim Number	Check Number	Claim Amount	Approved/Disapproved
001	REYNOLDS WHOLESALE CO	210638	12/15/2020	12/07/2020			1,446.69	

Account Number	Description	Invoice #	Date	P.O.	Amount
001-161-510	48X5 DUST MOP COMPLETE (5)	67907	11/19/2020	210165	196.25
001-092-510	TISSUE 96 ROLLS/CS (5)	67955	12/01/2020	210187	202.50
001-092-510	WINDEX SPRAY 32OZ/12CS	67955	12/01/2020	210187	57.50
001-092-510	CARPET CLEANER 1GAL (2)	67955	12/01/2020	210187	27.50
001-092-510	CARPET DEODORIZER 12CS	67955	12/01/2020	210187	34.68
001-092-510	NABC CLEANER 1GAL/4CS	67955	12/01/2020	210187	46.00

Docket of Claims
Release date from 12/15/2020 thru 12/15/2020

Fund	Name of Claimant	Trans #	Release Date	Claim Date	Claim Number	Check Number	Claim Amount	Approved/Disapproved
001	REYNOLDS WHOLESALE CO	210638	12/15/2020	12/07/2020			1,446.69	(CONTINUED)

Account Number	Description	Invoice #	Date	P.O.	Amount
001-092-510	PINE SOL 144OZ/3CS	67955	12/01/2020	210187	32.85
001-092-510	PAPER TOWELS 30 ROLLS/CS (6)	67955	12/01/2020	210187	155.40
001-092-510	MF BROWN TOWELS CS (8)	67955	12/01/2020	210187	159.60
001-092-510	24" DUST MOPS (2)	67955	12/01/2020	210187	27.90
001-092-510	PF LATEX GLOVES 100CT XL	67955	12/01/2020	210187	109.50
001-092-510	URINAL MATS 6CS	67955	12/01/2020	210187	49.60
001-092-510	URINAL SCREENS 12CS	67955	12/01/2020	210187	15.00
001-092-510	DIAL ANTIBACT PUMP 7.5OZ (6)	67955	12/01/2020	210187	16.80
001-092-510	38X58 CAN LINERS 100CT/CS	67955	12/01/2020	210187	32.95
001-092-510	30X36 CAN LINERS 200CT/CS	67955	12/01/2020	210187	19.95
001-092-510	24X33 CAN LINERS 500CT/CS	67955	12/01/2020	210187	22.95
001-092-510	DAMP MOP 4GAL/CS	67955	12/01/2020	210187	37.00
001-092-510	DISINFECTANT SPRAY 12CS (2)	67955	12/01/2020	210187	142.80
001-092-510	CS FOAMING SOAP	67955	12/01/2020	210187	59.96

Fund	Name of Claimant	Trans #	Release Date	Claim Date	Claim Number	Check Number	Claim Amount	Approved/Disapproved
001	MID SOUTH UNIFORM & SUPPLY INC	210639	12/15/2020	12/07/2020			1,831.76	

Account Number	Description	Invoice #	Date	P.O.	Amount
001-100-535	SS ARMORSKIN SHIRT (3)	611393	11/25/2020	210060	156.75
001-100-535	SS ARMORSKIN SHIRT (2)	611393	11/25/2020	210060	104.50
001-100-535	SS ARMORSKIN SHIRT (2)	611393	11/25/2020	210060	95.00
001-100-535	NAVY LS UNIFORM SHIRT	611393	11/25/2020	210060	49.91
001-100-535	NAVY LS UNIFORM SHIRT	611393	11/25/2020	210060	49.91
001-100-535	NAVY UNIFORM PANTS	611393	11/25/2020	210060	91.68
001-100-535	NAVY UNIFORM PANTS	611393	11/25/2020	210060	91.68
001-100-535	NAVY UNIFORM PANTS	611393	11/25/2020	210060	91.68
001-100-535	NAVY UNIFORM PANTS	611393	11/25/2020	210060	91.68
001-100-535	NAVY UNIFORM PANTS	611393	11/25/2020	210060	91.68
001-100-535	NYLON LWT COACH JACKET	611393	11/25/2020	210060	82.00
001-100-535	HD GENESIS NAVY JACKET	611393	11/25/2020	210060	166.17
001-100-535	SEW ON PATCH (14)	611393	11/25/2020	210060	14.00
001-100-535	SEW ON PATCH	611393	11/25/2020	210060	4.00
001-100-535	EMBROIDER FRONT (4)	611393	11/25/2020	210060	20.00
001-100-535	EMBROIDER BACK (24)	611393	11/25/2020	210060	60.00
001-100-535	GENESIS ID PANEL POLICE	611393	11/25/2020	210060	20.33
001-100-535	SS NAVY UNIFORM SHIRT (3)	611417	11/25/2020	210086	140.70
001-100-535	NAVY PANTS NO STRIPES (3)	611417	11/25/2020	210086	137.52
001-100-535	NAVY LS SHIRTS (2)	611417	11/25/2020	210086	99.82
001-100-535	SS ARMORSKIN SHIRT (3)	611417	11/25/2020	210086	156.75
001-100-535	SEW ON PATCH (16)	611417	11/25/2020	210086	16.00

Fund	Name of Claimant	Trans #	Release Date	Claim Date	Claim Number	Check Number	Claim Amount	Approved/Disapproved
001	MS FIRE ACADEMY	210640	12/15/2020	12/07/2020			260.00	

Account Number	Description	Invoice #	Date	P.O.	Amount
001-161-681	FSI 1041-I-II: GERMANY, K	28474	12/04/2020	200879	65.00
001-161-681	FSI 1041-I-II: HANCOCK, M	28474	12/04/2020	200879	65.00
001-161-681	FSI 1041-I-II: HEADMAN, D	28474	12/04/2020	200879	65.00
001-161-681	FSI 1041-I-II: PUZZ, G	28474	12/04/2020	200879	65.00

Fund	Name of Claimant	Trans #	Release Date	Claim Date	Claim Number	Check Number	Claim Amount	Approved/Disapproved
001	GULF COAST BUSINESS SUPPLY CO	210641	12/15/2020	12/07/2020			140.86	

Account Number	Description	Invoice #	Date	P.O.	Amount
001-161-510	ANTIBACT DISPENSE REFILL 12/CT	216159.2	11/23/2020	210102	140.86

Docket of Claims
Release date from 12/15/2020 thru 12/15/2020

Fund	Name of Claimant	Trans #	Release Date	Claim Date	Claim Number	Check Number	Claim Amount	Approved/Disapproved
001	MS TROPHY LLC	210644	12/15/2020	12/07/2020			160.30	

Account Number	Description	Invoice #	Date	P.O.	Amount
001-100-535	NAME-SERVING BARS (4)	14043	08/28/2020	200904	124.80
001-100-535	SHIPPING	14043	08/28/2020	200904	4.50
001-100-535	NAME-SERVING BAR	14298	11/25/2020	200760	31.00

Fund	Name of Claimant	Trans #	Release Date	Claim Date	Claim Number	Check Number	Claim Amount	Approved/Disapproved
001	LEE TRACTOR CO OF MISSISSIPPI INC	210646	12/15/2020	12/07/2020			132.41	

Account Number	Description	Invoice #	Date	P.O.	Amount
001-170-639	IGN SWITCH: EXCAVATOR	PI00594	11/17/2020	210158	113.55
001-170-639	KEY STARTER: EXCAVATOR	PI00630	11/19/2020	210163	18.86

Fund	Name of Claimant	Trans #	Release Date	Claim Date	Claim Number	Check Number	Claim Amount	Approved/Disapproved
001	GOODYEAR AUTO CENTER	210647	12/15/2020	12/07/2020			631.00	

Account Number	Description	Invoice #	Date	P.O.	Amount
001-100-638	SET 245/55R18 103V EAG:U #32	222825	11/25/2020	210181	631.00

Fund	Name of Claimant	Trans #	Release Date	Claim Date	Claim Number	Check Number	Claim Amount	Approved/Disapproved
001	SECURE NETWORKS LLC	210648	12/15/2020	12/07/2020			1,323.00	

Account Number	Description	Invoice #	Date	P.O.	Amount
001-040-704	DELL OPTIPLEX 3080 SFF WINDOWS	4377	11/23/2020	210156	1,033.00
001-040-704	MS HOME AND BUSINESS 2019	4377	11/23/2020	210156	265.00
001-040-704	SHIPPING	4377	11/23/2020	210156	25.00

Fund	Name of Claimant	Trans #	Release Date	Claim Date	Claim Number	Check Number	Claim Amount	Approved/Disapproved
001	STAPLES BUSINESS ADVANTAGE DEPT ATL	210649	12/15/2020	12/07/2020			178.80	

Account Number	Description	Invoice #	Date	P.O.	Amount
001-090-500	JUMBO PAPER CLIPS 100/BOX	3460274497	10/29/2020	210098	.38
001-090-500	BLACK INK HP64	3460274497	10/29/2020	210098	18.89
001-090-500	TRI-COLOR INK HP64	3460274497	10/29/2020	210098	24.89
001-090-500	TRI-COLOR INK HP65 CMY	3460274497	10/29/2020	210098	16.99
001-090-500	THERMAL POUCHES LETTER	3460274497	10/29/2020	210098	5.50
001-090-500	BIC ATLANTIS PENS BLACK 12/PK	3460274497	10/29/2020	210098	12.51
001-090-500	CLASP ENVELOPES 9X12 100/BOX	3460274497	10/29/2020	210098	6.91
001-090-500	#2 WOODEN PENCILS 12/BOX	3460274497	10/29/2020	210098	.58
001-090-500	BLACK TONER HP305A	3460274498	10/29/2020	210098	71.50
001-090-500	BLACK INK HP65	3460274499	10/29/2020	210098	13.85
001-090-500	LEGAL NOTEPAD 8.5X14 12/PK	3460540374	10/31/2020	210098	6.80

Fund	Name of Claimant	Trans #	Release Date	Claim Date	Claim Number	Check Number	Claim Amount	Approved/Disapproved
001	BARNEYS POLICE AND HUNTING SUPPLIES	210650	12/15/2020	12/07/2020			179.97	

Account Number	Description	Invoice #	Date	P.O.	Amount
001-100-535	QUANTUM TDU PANTS (3)	55222	10/28/2020	210090	164.97
001-100-535	SHIPPING	55222	10/28/2020	210090	15.00

Fund	Name of Claimant	Trans #	Release Date	Claim Date	Claim Number	Check Number	Claim Amount	Approved/Disapproved
001	SPARKLIGHT	210655	12/15/2020	12/07/2020			73.78	

Account Number	Description	Invoice #	Date	P.O.	Amount
001-170-698	DEC 2020: SR BLDG #120793682	11242020	12/01/2020		73.78

Fund	Name of Claimant	Trans #	Release Date	Claim Date	Claim Number	Check Number	Claim Amount	Approved/Disapproved
001	SPARKLIGHT	210656	12/15/2020	12/07/2020			128.18	

Account Number	Description	Invoice #	Date	P.O.	Amount
001-092-698	DEC 2020: #107571481	11242020	12/01/2020		128.18

Docket of Claims
Release date from 12/15/2020 thru 12/15/2020

Fund	Name of Claimant	Trans #	Release Date	Claim Date	Claim Number	Check Number	Claim Amount	Approved/Disapproved
001	CENTERPOINT ENERGY	210657	12/15/2020	12/07/2020			100.15	

Account Number	Description	Invoice #	Date	P.O.	Amount
001-161-630	CENTRAL FIRE STN:10/27-11/24	11000885-1	12/02/2020		64.21
001-161-630	SOUTH FIRE STN:10/27-11/24/20	11000999-0	12/02/2020		35.94

Fund	Name of Claimant	Trans #	Release Date	Claim Date	Claim Number	Check Number	Claim Amount	Approved/Disapproved
001	AT&T MOBILITY	210658	12/15/2020	12/07/2020			62.49	

Account Number	Description	Invoice #	Date	P.O.	Amount
001-161-605	CELL SERVICE (2)	12052020	11/27/2020		62.49

Fund	Name of Claimant	Trans #	Release Date	Claim Date	Claim Number	Check Number	Claim Amount	Approved/Disapproved
001	C SPIRE WIRELESS	210659	12/15/2020	12/07/2020			775.32	

Account Number	Description	Invoice #	Date	P.O.	Amount
001-021-605	CITY MGR CELL PHONE	0030759348	11/30/2020		47.14
001-040-605	ADMIN CELL PHONES	0030759348	11/30/2020		128.47
001-090-605	BLDG-PLNG CELL PHONES	0030759348	11/30/2020		201.43
001-090-698	IPAD SERVICE (3)	0030759348	11/30/2020		102.57
001-094-605	GRANT-PROJ CELL PHONES	0030759348	11/30/2020		94.28
001-170-605	RECREATION CELL PHONES	0030759348	11/30/2020		150.00
001-205-605	MAINT CELL PHONE	0030759348	11/30/2020		51.43

Fund	Name of Claimant	Trans #	Release Date	Claim Date	Claim Number	Check Number	Claim Amount	Approved/Disapproved
001	SBM REPORTING LLC	210661	12/15/2020	12/07/2020			175.00	

Account Number	Description	Invoice #	Date	P.O.	Amount
001-090-698	12/03/20 PLANNING MTG	MB1170	12/04/2020		175.00

Fund	Name of Claimant	Trans #	Release Date	Claim Date	Claim Number	Check Number	Claim Amount	Approved/Disapproved
001	FUELMAN	210662	12/15/2020	12/07/2020			2,035.57	

Account Number	Description	Invoice #	Date	P.O.	Amount
001-090-525	UNL FUEL	NP59277058	12/07/2020		83.65
001-100-525	UNL FUEL	NP59277058	12/07/2020		1,524.26
001-161-525	UNL & DSL FUEL	NP59277058	12/07/2020		248.77
001-170-525	UNL & DSL FUEL	NP59277058	12/07/2020		139.54
001-205-525	UNL FUEL	NP59277058	12/07/2020		39.35

Fund	Name of Claimant	Trans #	Release Date	Claim Date	Claim Number	Check Number	Claim Amount	Approved/Disapproved
001	RETAIL STRATEGIES LLC	210666	12/15/2020	11/08/2020			7,528.00	

Account Number	Description	Invoice #	Date	P.O.	Amount
001-021-688	CONSULTING SERV: INV BAL DUE	401-3B	12/19/2020		7,528.00

Fund	Name of Claimant	Trans #	Release Date	Claim Date	Claim Number	Check Number	Claim Amount	Approved/Disapproved
001	MATTHEW LACHAUSEE	210667	12/15/2020	12/08/2020			360.00	

Account Number	Description	Invoice #	Date	P.O.	Amount
001-010-602	JUDGE PRO TEM: 4 HOURS	11302020	12/07/2020		360.00

FUND TOTAL 1 Claims to Checks 60 Total 96,218.34 Manual Held Total 96,218.34

Docket of Claims
Release date from 12/15/2020 thru 12/15/2020

Fund	Name of Claimant	Trans #	Release Date	Claim Date	Claim Number	Check Number	Claim Amount	Approved/Disapproved
171	LOWES HOME CENTERS INC	210624	12/15/2020	12/03/2020			138.60	
	Account Number / Description			Invoice #	Date	P.O.	Amount	
	171-300-720 / 80LB CONCRETE(42):FITNESS TRL			901533	11/18/2020			138.60
171	GOLDIN METALS INC	210642	12/15/2020	12/07/2020			1,934.16	
	Account Number / Description			Invoice #	Date	P.O.	Amount	
	171-176-779 / ROOF MATERIALS:SHEP BATH HOUSE			654114	11/11/2020	210074		1,934.16
171	SHERWIN-WILLIAMS COMPANY	210643	12/15/2020	12/07/2020			2,358.09	
	Account Number / Description			Invoice #	Date	P.O.	Amount	
	171-176-779 / EMERALD EXGL EXTRA 5GAL (5)			4734-2	11/09/2020	210075		822.75
	171-176-779 / PREPRT PB LTX WHT 5GAL (5)			4734-2	11/09/2020	210075		252.90
	171-176-779 / EX FD ALK PR WHITE 5GAL (5)			4734-2	11/09/2020	210075		280.70
	171-176-779 / SHLD-CRT KIT GRAY (4)			4734-2	11/09/2020	210075		351.16
	171-176-779 / DECFL - SALT & PEPPER (16)			4734-2	11/09/2020	210075		193.44
	171-176-779 / BLDR PAPER 35"X166' (3)			4734-2	11/09/2020	210075		40.47
	171-176-779 / 36MM BL TAPE EL (6)			4734-2	11/09/2020	210075		35.94
	171-176-779 / 2090-48MM CONTR PACK (2)			4734-2	11/09/2020	210075		35.98
	171-176-779 / 10'X25' 3.5MIL SW (2)			4734-2	11/09/2020	210075		27.58
	171-176-779 / WASHEDRECYCL WHT LG			4734-2	11/09/2020	210075		19.99
	171-176-779 / DISCOUNT			4734-2	11/09/2020	210075		-10.21
	171-176-779 / SHLD-CRT KIT CLEAR (4)			4735-9	11/09/2020	210116		300.00
	171-176-779 / SHARKGRIP 3.20Z ADD			4735-9	11/09/2020	210116		7.39
171	SOUTHERN PIPE & SUPPLY CO INC	210645	12/15/2020	12/07/2020			1,505.09	
	Account Number / Description			Invoice #	Date	P.O.	Amount	
	171-176-779 / FLOOR MOUNT ADA BOWL			4735939-00	11/06/2020	210117		91.13
	171-176-779 / WHITE TOILET TANK			4735939-00	11/06/2020	210117		51.52
	171-176-779 / ELONGATE WHITE PLASTIC TOILET			4735939-00	11/06/2020	210117		19.82
	171-176-779 / 3/8" SS CLOSET CONN BRAIDED			4735939-00	11/06/2020	210117		3.78
	171-176-779 / 3/8" ANGLE COMP STOP (5)			4735939-00	11/06/2020	210117		49.40
	171-176-779 / SWANWAX WAX RING			4735939-00	11/06/2020	210117		2.07
	171-176-779 / CLOSET BOLT W/NUTS-WASHER (2)			4735939-00	11/06/2020	210117		4.00
	171-176-779 / DARFIELD URINAL			4735939-00	11/06/2020	210117		199.00
	171-176-779 / REAGAL FLUSH VALVE			4735939-00	11/06/2020	210117		107.91
	171-176-779 / P-TRAP W/CLEAN OUT 1-1/2 (3)			4735939-00	11/06/2020	210117		75.69
	171-176-779 / HANDI LAV-GUARD INSUL KIT (3)			4735939-00	11/06/2020	210117		154.74
	171-176-779 / MULTI CHOICE UNIVR VAL BODY(2)			4735939-00	11/06/2020	210117		107.18
	171-176-779 / SHOWER FCT TRIM W/LEVER HDL			4735939-00	11/06/2020	210117		167.00
	171-176-779 / BPIFAD 1/2 BARB PEX ADPTR (6)			4735939-00	11/06/2020	210117		16.26
	171-176-779 / BPIDE9D 1/2 BARB PEX FIP (2)			4735939-00	11/06/2020	210117		10.76
	171-176-779 / BPI9D 1/2 BRB INSERT 90 (10)			4735939-00	11/06/2020	210117		14.20
	171-176-779 / PPEXRD201/2(5/80D)X20'RED(20)			4735939-00	11/06/2020	210117		9.20
	171-176-779 / PPEXBD201/2(5/80D)X20'BLUE(20)			4735939-00	11/06/2020	210117		18.40
	171-176-779 / 1/2" PEX COPR INSERT RING (30)			4735939-00	11/06/2020	210117		8.40
	171-176-779 / 3/8" SS LAV CONN BRAIDED (4)			4735939-00	11/06/2020	210117		18.00
	171-176-779 / SCREW IN STRAINER 2-5/8 (2)			4735939-00	11/06/2020	210117		70.00
	171-176-779 / 24X24 RETURN GRILLE			4735939-00	11/06/2020	210117		28.57
	171-176-779 / 12X12 4W WH SD WALL CEILING(3)			4735939-00	11/06/2020	210117		180.00
	171-176-779 / CP GRAB BAR (2)			4735939-00	11/06/2020	210117		88.12

Docket of Claims
Release date from 12/15/2020 thru 12/15/2020

Fund	Name of Claimant	Trans #	Release Date	Claim Date	Claim Number	Check Number	Claim Amount	Approved/Disapproved
171	SOUTHERN PIPE & SUPPLY CO INC	210645	12/15/2020	12/07/2020			1,505.09	(CONTINUED)

Account Number	Description	Invoice #	Date	P.O.	Amount
171-176-779	1-1/2 IPS CHR F&C PLATE (3)	4735939-00	11/06/2020	210117	3.99
171-176-779	1/2 CTS CP F&C PLATE (5)	4735939-00	11/06/2020	210117	5.95

Fund	Name of Claimant	Trans #	Release Date	Claim Date	Claim Number	Check Number	Claim Amount
171	HOME TOWN LUMBER & SUPPLY INC	210651	12/15/2020	12/07/2020			7,182.36

Account Number	Description	Invoice #	Date	P.O.	Amount
171-176-779	1/2X4X8 W-GUARD SHEET ROCK (7)	122253	11/10/2020	210145	101.50
171-176-779	#6 1-5/8 SHARP POINT SCREWS(5)	122253	11/10/2020	210145	17.45
171-176-779	1/2(15/32)X4X8 APA SHEETING(8)	122253	11/10/2020	210145	266.32
171-176-779	1X4X8 STRIPPING PINE (5)	122253	11/10/2020	210145	10.95
171-176-779	2X4X16 TREATED G-CONTACT (135)	121755	10/26/2020	210080	2,361.15
171-176-779	1X2X12 PLYCEM 3/4" (40)	121755	10/26/2020	210080	287.60
171-176-779	1X4"X12'PLYCEM REVERSIBLE (20)	121755	10/26/2020	210080	219.80
171-176-779	1X8X12' PLYCEM REVERSE 3/4(14)	121755	10/26/2020	210080	317.66
171-176-779	15A WHT SELF TEST GFCI	121755	10/26/2020	210080	17.99
171-176-779	WH ROCKER W-PLATE 2151W-BOX(5)	121755	10/26/2020	210080	4.45
171-176-779	PASLOAD 3" GALV RINGSHANK (2)	121755	10/26/2020	210080	185.38
171-176-779	DA25EAB 2-1/2 GALV FINISH (2)	121755	10/26/2020	210080	111.38
171-176-779	10.1 WHT ALEX PLUS CAULK (36)	121755	10/26/2020	210080	107.64
171-176-779	MP QT LW FAST SPACKLING (2)	121755	10/26/2020	210080	10.98
171-176-779	12/2 N/M CABLE 250' ROLL	121755	10/26/2020	210080	89.99
171-176-779	100PK WING CONNECTOR	121755	10/26/2020	210080	9.99
171-176-779	LN601 29 OZ LIQUID NAIL (12)	121755	10/26/2020	210080	87.48
171-176-779	ALLURA TEXT 4X8 CEDAR (30)	121756	10/26/2020	210080	1,017.60
171-176-779	LIGHT #10111078 (3)	122011	11/03/2020	210080	362.97
171-176-779	VENT FANS (3)	122011	11/03/2020	210080	232.47
171-176-779	15A WHT SELF TEST GFCI (4)	122011	11/03/2020	210080	71.96
171-176-779	DA25EAB 2-1/2 GALV FINISH 3M	122011	11/03/2020	210080	55.69
171-176-779	LN601 29 OZ LIQUID NAIL (24)	122011	11/03/2020	210080	174.96
171-176-779	COMMERCIAL DOOR 3068	122826	11/25/2020	210097	1,059.00

FUND TOTAL 171 Claims to Checks 5 Total 13,118.30 Manual Held Total 13,118.30

Docket of Claims
Release date from 12/15/2020 thru 12/15/2020

Fund	Name of Claimant	Trans #	Release Date	Claim Date	Claim Number	Check Number	Claim Amount	Approved/Disapproved
176	SINGING RIVER ELECTRIC COOPERATIVE	210598	12/15/2020	12/02/2020			1,816.11	
	Account Number / Description			Invoice #	Date	P.O.	Amount	
	176-170-631 PARK FACILITIES 76854002			11192020	11/25/2020			1,594.55
	176-170-631 HOUSE 76855002			11192020	11/25/2020			49.66
	176-170-631 SSP WELCOME CENTER 108928002			11192020	11/25/2020			171.90
176	FUELMAN	210606	12/15/2020	12/02/2020			31.76	
	Account Number / Description			Invoice #	Date	P.O.	Amount	
	176-170-525 UNL FUEL			NP59201240	11/30/2020			31.76
176	LOWES HOME CENTERS INC	210623	12/15/2020	12/03/2020			32.00	
	Account Number / Description			Invoice #	Date	P.O.	Amount	
	176-170-639 50LB CONCRETE (10):SHEP GRILLS			901273	11/17/2020			32.00
176	PERKINS TIRE & POLARIS	210653	12/15/2020	12/07/2020			184.95	
	Account Number / Description			Invoice #	Date	P.O.	Amount	
	176-170-639 STARTER: POLARIS			36954	10/26/2020	210142		184.95
176	C SPIRE WIRELESS	210660	12/15/2020	12/07/2020			51.43	
	Account Number / Description			Invoice #	Date	P.O.	Amount	
	176-170-605 CELL PHONE			0030759348	11/30/2020			51.43
176	FUELMAN	210663	12/15/2020	12/07/2020			27.76	
	Account Number / Description			Invoice #	Date	P.O.	Amount	
	176-170-525 UNL FUEL			NP59277058	12/07/2020			27.76

FUND TOTAL 176 Claims to Checks 6 Total 2,144.01 Manual Held Total 2,144.01

Docket of Claims
Release date from 12/15/2020 thru 12/15/2020

Fund	Name of Claimant	Trans #	Release Date	Claim Date	Claim Number	Check Number	Claim Amount	Approved/Disapproved
400	SPARKLIGHT	210545	12/15/2020	11/25/2020			71.41	
	Account Number / Description			Invoice #	Date	P.O.	Amount	
	400-650-698 / DEC 2020: #107663106			11162020	11/23/2020			71.41
400	AT&T	210550	12/15/2020	11/30/2020			297.19	
	Account Number / Description			Invoice #	Date	P.O.	Amount	
	400-650-605 / MONTHLY SERVICE			2284975234	11/14/2020			297.19
400	ANSER	210583	12/15/2020	12/01/2020			605.57	
	Account Number / Description			Invoice #	Date	P.O.	Amount	
	400-650-698 / BASE RATE:11/25/20-12/22/20			277-112520	11/25/2020			420.00
	400-650-698 / 631 MTS 10/28/20-11/24/20			277-112520	11/25/2020			175.57
	400-650-698 / HOLIDAY CHARGES			277-112520	11/25/2020			10.00
400	MSC 7511	210588	12/15/2020	12/01/2020			149.53	
	Account Number / Description			Invoice #	Date	P.O.	Amount	
	400-650-698 / MPC4504 USAGE: B/W			INV3958182	11/19/2020			27.71
	400-650-698 / MPC4504 USAGE: COLOR			INV3958182	11/19/2020			121.82
400	SINGING RIVER ELECTRIC COOPERATIVE	210599	12/15/2020	12/02/2020			3,567.69	
	Account Number / Description			Invoice #	Date	P.O.	Amount	
	400-651-631 / LIFT STNS 17875			11192020	11/25/2020			228.10
	400-651-631 / LIFT STNS 17883			11192020	11/25/2020			1,949.20
	400-651-631 / LIFT STNS 17884			11192020	11/25/2020			1,390.39
400	SINGING RIVER ELECTRIC COOPERATIVE	210600	12/15/2020	12/02/2020			7,667.49	
	Account Number / Description			Invoice #	Date	P.O.	Amount	
	400-651-631 / IONIZATION PLANT 99216002			11182020	11/24/2020			236.82
	400-651-631 / LIFT STATIONS 17882			11182020	11/24/2020			2,281.02
	400-651-631 / WATER WELLS 17882			11182020	11/24/2020			3,543.03
	400-651-631 / CITY HALL SOUTH 17882			11182020	11/24/2020			1,606.62
400	SINGING RIVER ELECTRIC COOPERATIVE	210601	12/15/2020	12/02/2020			25.85	
	Account Number / Description			Invoice #	Date	P.O.	Amount	
	400-651-631 / CARTER RD WTR TANK 109812001			11152020	11/20/2020			25.85
400	SINGING RIVER ELECTRIC COOPERATIVE	210602	12/15/2020	12/02/2020			5,853.54	
	Account Number / Description			Invoice #	Date	P.O.	Amount	
	400-651-631 / LIFT STNS 89627001			11172020	11/23/2020			67.02
	400-651-631 / LIFT STNS 89702001			11172020	11/23/2020			26.29
	400-651-631 / LIFT STNS 17881			11172020	11/23/2020			2,769.25
	400-651-631 / WATER WELLS 17881			11172020	11/23/2020			2,990.98
400	SINGING RIVER ELECTRIC COOPERATIVE	210603	12/15/2020	12/02/2020			2,278.29	
	Account Number / Description			Invoice #	Date	P.O.	Amount	
	400-651-631 / LIFT STATIONS 20649			11152020	11/20/2020			911.60
	400-651-631 / LIFT STATIONS 28779			11152020	11/20/2020			87.81
	400-651-631 / SCHOONER WELL 20688			11122020	11/18/2020			876.08
	400-651-631 / LIFT STATIONS 20688			11122020	11/18/2020			402.80

Docket of Claims
Release date from 12/15/2020 thru 12/15/2020

Fund	Name of Claimant	Trans #	Release Date	Claim Date	Claim Number	Check Number	Claim Amount	Approved/Disapproved
400	JACKSON COUNTY UTILITY AUTHORITY	210604	12/15/2020	12/02/2020			235,473.00	
	Account Number / Description			Invoice #	Date	P.O.	Amount	
	400-651-668 / DEC 2020 TREATMENT CHGS			917	12/01/2020			235,473.00
400	FUELMAN	210607	12/15/2020	12/02/2020			55.58	
	Account Number / Description			Invoice #	Date	P.O.	Amount	
	400-650-525 / UNL FUEL			NP59201240	11/30/2020			55.58
400	CLEARWATER SOLUTIONS LLC	210612	12/15/2020	12/03/2020			170,690.75	
	Account Number / Description			Invoice #	Date	P.O.	Amount	
	400-650-672 / NOV 2020 OPERATION FEE			GAUTIER096	12/01/2020			170,690.75
400	MALLETTE BROTHERS CONSTRUCTION INC	210626	12/15/2020	12/04/2020			756.76	
	Account Number / Description			Invoice #	Date	P.O.	Amount	
	400-651-683 / 3.02 GABION LIMESTONE TN			21983	11/30/2020			178.18
	400-651-683 / 2.88 RIP RAP TN			21983	11/30/2020			169.92
	400-651-585 / 3.18 RAP TN			21983	11/30/2020			95.40
	400-651-683 / 7.51 RAP TN			21983	11/30/2020			225.30
	400-651-585 / 7.33 ASPHALT TN			21983	11/30/2020			87.96
400	COGENT STRATEGIES LLC	210635	12/15/2020	12/07/2020			7,500.00	
	Account Number / Description			Invoice #	Date	P.O.	Amount	
	400-650-601 / PROFESSIONAL FEES			2090	12/02/2020			7,500.00
400	MUSCO-GULFPORT 1227	210652	12/15/2020	12/07/2020			66.00	
	Account Number / Description			Invoice #	Date	P.O.	Amount	
	400-651-584 / 6" FLANGE KIT			0687502	11/20/2020	210166		66.00
400	WASTE MANAGEMENT OF MS-GLF COAST INC	210654	12/15/2020	12/07/2020			2,140.07	
	Account Number / Description			Invoice #	Date	P.O.	Amount	
	400-651-698 / ROLL-OFF TIMBERLANE			07 3054647687	12/01/2020			2,140.07
400	FUELMAN	210664	12/15/2020	12/07/2020			136.53	
	Account Number / Description			Invoice #	Date	P.O.	Amount	
	400-650-525 / UNL FUEL			NP59277058	12/07/2020			136.53

FUND TOTAL 400 Claims to Checks 17 Total 437,335.25 Manual Held Total 437,335.25

Docket of Claims
Release date from 12/15/2020 thru 12/15/2020

Fund	Name of Claimant	Trans #	Release Date	Claim Date	Claim Number	Check Number	Claim Amount	Approved/Disapproved
404	DELTA SANITATION OF MS LLC	210610	12/15/2020	12/03/2020			106,836.84	_____

Account Number	Description	Invoice #	Date	P.O.	Amount
404-677-693	NOV 2020 RES GARBAGE (6348)	0001124331	11/30/2020		106,836.84

FUND TOTAL 404 Claims to Checks 1 Total 106,836.84 Manual Held Total 106,836.84

Docket of Claims
Release date from 12/15/2020 thru 12/15/2020

SUMMARY OF ALL FUNDS

FUND 1	Claims	to	Checks	60	Total	96,218.34	Manual	Held	Total	96,218.34
FUND 171	Claims	to	Checks	5	Total	13,118.30	Manual	Held	Total	13,118.30
FUND 176	Claims	to	Checks	6	Total	2,144.01	Manual	Held	Total	2,144.01
FUND 400	Claims	to	Checks	17	Total	437,335.25	Manual	Held	Total	437,335.25
FUND 404	Claims	to	Checks	1	Total	106,836.84	Manual	Held	Total	106,836.84
	Total for all Funds		Checks	89	Total	655,652.74	Manual	Held	Total	655,652.74

Councilman Vaughan made the motion to approve Consent Agenda Items 1-6, as presented. Councilwoman Martin seconded the motion. The vote was carried unanimously.

There came for consideration of the Mayor and Members of the Council of the City of Gautier, Mississippi, the following:

ORDER NUMBER 502-2020

IT IS HEREBY ORDERED by the Mayor and Members of the Council of the City of Gautier, Mississippi, that Consent Agenda Items 1-6 are hereby approved.

IT IS FURTHER ORDERED that the City Manager or City Clerk is authorized to execute any and all documents necessary.

Motion was made by **Councilman Vaughan**, seconded by **Councilwoman Martin**, and the following vote was recorded:

AYES: **Phil Torjusen**
Mary Martin
Cameron George
Richard Jackson
Casey Vaughan
Rusty Anderson
Adam Colledge

NAYS: **None**

_____
MAYOR

ATTEST:

_____
CITY CLERK

Passed and Adopted by Mayor and Members of the Council of the City of Gautier, Mississippi, at the meeting of December 15, 2020.

There came for consideration of the Mayor and Members of the Council of the City of Gautier, Mississippi the following:

ORDER NUMBER 503-2020

WHEREAS, the City of Gautier will host its annual Lights and Lagniappe on the Bayou on December 5th at 5:00pm at the Singing River Mall Property; and

WHEREAS, this is an excellent opportunity for the City of Gautier to promote and bring favorable recognition to the City of Gautier and will have a great economic impact to the local businesses within the City of Gautier; and

WHEREAS, Gautier Pride Inc. has offered to provide a monetary donation in the amount of $8,000.00 for the purpose of offsetting the costs incurred by the City for the Lights and Lagniappe on the Bayou; and

WHEREAS, the Mayor and Council Members have determined that acceptance of this donation is in the best interest of the City of Gautier.

IT IS HEREBY ORDERED by the Mayor and Members of the Council of the City of Gautier, Mississippi that the monetary donation of $8,000 from Gautier Pride Inc. for the City of Gautier's Lights and Lagniappe on the Bayou held on December 5th is hereby approved and accepted.

IT IS FURTHER ORDERED that the City Manager and City Clerk are authorized to execute any and all documents necessary for this purpose.

Motion was made by **Councilman Vaughan,** seconded by **Councilwoman Martin,** and the following vote was recorded:

AYES: **Phil Torjusen**
Mary Martin
Cameron George
Richard Jackson
Casey Vaughan
Rusty Anderson
Adam Colledge

NAYS: **None**

_____
MAYOR

ATTEST:

_____
CITY CLERK

Passed and Adopted by Mayor and Members of the Council of the City of Gautier, Mississippi, at the meeting of December 15, 2020.

There came on for consideration of the Mayor and Members of the Council of the City of Gautier, Mississippi, the following:

RESOLUTION NUMBER 093-2020

WHEREAS, on March 16, 2020, Mayor of Gautier, Phil Torjusen issued a proclamation of a local emergency due to conditions of extreme peril to the safety of persons and property which have arisen within said City of Gautier, Mississippi due to the COVID-19 outbreak; and

WHEREAS, on March 17, 2020, the City Council of Gautier ratified the proclamation of local emergency and continued the existence of same; and

WHEREAS, the City Council finds that it is necessary and in the best interest of the public welfare and safety to continue the state of local emergency as indicated in that resolution.

NOW, THEREFORE, BE IT RESOLVED that a local emergency does continue to exist throughout said City of Gautier, Mississippi, as indicated; and

IT IS FURTHER PROCLAIMED AND RESOLVED that said local emergency shall be deemed to continue to exist until further notice.

IT IS FURTHER PROCLAIMED AND RESOLVED that the City Manager or City Clerk is hereby authorized to execute any and all documents necessary for this purpose.

Motion was made by **Councilman Vaughan,** seconded by **Councilwoman Martin,** and the following vote was recorded:

AYES: **Phil Torjusen**
Mary Martin
Cameron George
Richard Jackson
Casey Vaughan
Rusty Anderson
Adam Colledge

NAYS: **None**

_____
MAYOR

ATTEST:

_____
CITY CLERK

Passed and Adopted by Mayor and Members of the Council of the City of Gautier, Mississippi, at the meeting of December 15, 2020.

There came for consideration of the Mayor and Members of the Council of the City of Gautier, Mississippi, the following:

ORDER NUMBER 504-2020

WHEREAS, Miss. Code Ann. 21-15-33 requires that the minutes be adopted and approved by a majority of the members of the governing body at the next regular meeting or within thirty (30) days of the meeting they represent, whichever occurs first. Upon such approval, the minutes are valid from and after the date of the meeting; and

IT IS HEREBY ORDERED by the Mayor and Members of the Council of the City of Gautier, Mississippi, that the minutes from the Recessed Council Meeting held November 17, 2020 and Regular Council Meeting held December 1, 2020 are hereby approved.

IT IS FURTHER ORDERED that the City Manager or City Clerk is authorized to execute any and all documents necessary for this purpose.

Motion was made by **Councilman Vaughan**, seconded by **Councilwoman Martin,** and the following vote was recorded:

AYES: **Phil Torjusen**
Mary Martin
Cameron George
Richard Jackson
Casey Vaughan
Rusty Anderson
Adam Colledge

NAYS: **None**

_____
MAYOR

ATTEST:

_____
CITY CLERK

Passed and Adopted by Mayor and Members of the Council of the City of Gautier, Mississippi, at the meeting of December 15, 2020.

There came for consideration of the Mayor and Members of the Council of the City of Gautier, Mississippi, the following:

ORDER NUMBER 505-2020

WHEREAS, the City desires to renew the lease with Pitney Bowes, Inc. for the rental of a postage machine in order to increase efficiency through automation and reducing the amount of individual-piece handling of mail;

WHEREAS, the Mayor and Council Members find that renewing the attached lease agreement is in the best interests of the City;

IT IS HEREBY ORDERED by the Mayor and Members of the Council of the City of Gautier, Mississippi, that the City is hereby authorized to renew a Rental Agreement with Pitney Bowes for the rental of a postage machine in the quarterly amount of $537.54.

IT IS FURTHER ORDERED that the City Manager or City Clerk is authorized to execute any and all documents necessary for this purpose.

Motion was made by **Councilman Vaughan**, seconded by **Councilwoman Martin,** and the following vote was recorded:

AYES: **Phil Torjusen**
Mary Martin
Cameron George
Richard Jackson
Casey Vaughan
Rusty Anderson
Adam Colledge

NAYS: **None**

_____
MAYOR

ATTEST:

_____
CITY CLERK

Passed and Adopted by Mayor and Members of the Council of the City of Gautier, Mississippi, at the meeting of December 15, 2020.

CITY OF GAUTIER
MEMORANDUM

To: Paula Yancey, City Manager
From: Sherry Farabee, Purchasing Agent
Date: 12/1/2020
Subject: Approval for renewal of Rental Agreement with Pitney Bowes, Inc. for a mailing machine

---

REQUEST:
City Council authorization is requested for the City of Gautier to accept the renewal agreement for the mailing machine between City of Gautier and Pitney Bowes, Inc. in the amount of $179.18 monthly or billed quarterly at $537.54. The monthly increase is $38.19.

BACKGROUND:
Pitney Bowes, Inc. has provided a postage machine to the City of Gautier in order to increase efficiency through automation and reducing the amount of individual-piece handling of mail.

DISCUSSION:
None

RECOMMENDATION:
Based on the attached information from Pitney Bowes, Inc. City staff recommends that City Council authorize the renewal agreement for the mailing machine in the amount of $179.18 or billed quarterly in the amount of $537.54.

ATTACHMENTS:
1. Pitney Bowes Rental Agreement 2020

RENTAL AGREEMENT
FOR USE BY MISSISSIPPI AGENCIES & GOVERNING AUTHORITIES
AND VENDORS
(applicable to equipment rental transactions)

This Rental Agreement (hereinafter referred to as Agreement) is entered into by and between CITY OF GAUTIER (hereinafter referred to as Customer), and Pitney Bowes (hereinafter referred to as Vendor). This Agreement becomes effective upon signature by Customer and Vendor, and shall take precedence over all agreements and understandings between the parties. Vendor, by its acceptance hereof, agrees to rent to Customer, and Customer, by its acceptance hereof, agrees to rent from Vendor, the equipment, including applicable software and services to render it continually operational, listed in Exhibit A, which is attached hereto and incorporated herein.

1. CUSTOMER ACCOUNT ESTABLISHMENT:

A. A separate Vendor Customer Number will be required for each specific customer/installation location.

B. The Customer is identified as the entity on the first line of the "bill-to" address. All invoices and notices of changes will be sent to the "bill-to" address in accordance with Paragraph 8 herein.

C. Ship-to and/or Installed-at address is the location to which the initial shipment of equipment/supplies will be made and the address to which service representatives will respond. Subsequent shipments of supplies for installed equipment will also be delivered to the "installed-at" address unless otherwise requested.

D. Unless creditworthiness for this Customer Number has been previously established by Vendor, Vendor's Credit Department may conduct a credit investigation for this Agreement. Notwithstanding delivery of equipment, Vendor may revoke this Agreement by written notice to the Customer if credit approval is denied within thirty (30) days after the date this Agreement is accepted for Vendor by an authorized representative.

2. EQUIPMENT SELECTION, PRICES, AND AGREEMENT: The Customer has selected and Vendor agrees to provide the equipment, including applicable software and services to render it continually operational, identified on Exhibit A attached to this Agreement. The specific prices, inclusive of applicable transportation charges, are as set forth on the attached Exhibit A. The parties understand and agree that the Customer is exempt from the payment of taxes.

3. SHIPPING AND TRANSPORTATION: Vendor agrees to pay all non-priority, ground shipping, transportation, rigging and drayage charges for the equipment from the equipment's place of manufacture to the installation address of the equipment as specified under this Agreement. If any form of express shipping method is requested, it will be paid for by Customer.

4. RISK OF LOSS OR DAMAGE TO EQUIPMENT: While in transit, Vendor shall assume and bear the entire risk of loss and damage to the equipment from any cause whatsoever. If, during the period the equipment is in Customer's possession, due to gross negligence of the customer, the equipment is lost or damaged, then, the customer shall bear the cost of replacing or repairing said equipment.

5. DELIVERY, INSTALLATION, ACCEPTANCE, AND RELOCATION:

A. DELIVERY: Vendor shall deliver the equipment to the location specified by Customer and pursuant to the delivery schedule agreed upon by the parties. If, through no fault of the Customer, Vendor is unable to deliver the equipment or software, the prices, terms and conditions will remain unchanged until delivery is made by Vendor. If, however, Vendor does not deliver the equipment or software within ten (10) working days of the delivery due date, Customer shall have the right to terminate the order without penalty, cost or expense to Customer of any kind whatsoever.

B. INSTALLATION SITE: At the time of delivery and during the period Vendor is responsible for maintenance of the equipment, the equipment installation site must conform to Vendor's published space, electrical and environmental requirements; and the Customer agrees to provide, at no charge, reasonable access to the equipment and to a telephone for local or toll free calls.

C. INSTALLATION DATE: The installation date of the equipment shall be that date as is agreed upon by the parties, if Vendor is responsible for installing the equipment.

D. ACCEPTANCE: Unless otherwise agreed to by the parties, Vendor agrees that Customer shall have ten (10) working days from date of delivery and installation, to inspect, evaluate and test the equipment to confirm that it is in good working order.

E. RELOCATION: Customer may transfer equipment to a new location by notifying Vendor in writing of the transfer at least thirty (30) calendar days before the move is made. If Vendor is responsible for maintenance of the equipment, this notice will enable Vendor to provide technical assistance in the relocation efforts, if needed, as well as to update Vendor's records as to machine location. There will be no cessation of rental charges during the period of any such transfer. The Vendor's cost of moving and reinstalling equipment from one location to another is not included in this Agreement, and Customer agrees to pay Vendor, after receipt of invoice of Vendor's charges with respect to such moving of equipment, which will be billed to Customer in accordance with Vendor's standard practice then in effect for commercial users of similar equipment or software and payment remitted in accordance with Paragraph 8 herein.

6. RENTAL TERM: The rental term for each item of equipment shall be that as stated in the attached Exhibit A. If the Customer desires to continue renting the equipment at the expiration of the original rental agreement, the Customer must enter into a new rental agreement which shall be separate from this Agreement. There will be no automatic renewals allowed. There shall be no option to purchase.

7. OWNERSHIP: Unless the Customer has obtained title to the equipment, title to the equipment shall be and remain vested at all times in Vendor or its assignee and nothing in this Agreement shall give or convey to Customer any right, title or interest therein, unless purchased by Customer. Nameplates, stencils or other indicia of Vendor's ownership affixed or to be affixed to the equipment shall not be removed or obliterated by Customer.

8. PAYMENTS:

A. INVOICING AND PAYMENTS: The charges for the equipment, software or services covered by this Agreement are specified in the attached Exhibit A. Charges for any partial month for any item of equipment shall be prorated based on a thirty (30) day month. Vendor shall submit an invoice with the appropriate documentation to Customer.

1. E-PAYMENT: The Vendor agrees to accept all payments in United States currency via the State of Mississippi's electronic payment and remittance vehicle. The Customer agrees to make payment in accordance with Mississippi law on "Timely Payments for Purchases by Public Bodies", Section 31-7-301, *et seq*. of the 1972 Mississippi Code Annotated, as amended, which generally provides for payment of undisputed amounts by the agency within forty-five (45) days of receipt of the invoice.

2. PAYMODE: Payments by state agencies using Mississippi's Accountability System for Government Information and Collaboration (MAGIC) shall be made and remittance information provided electronically as directed by the State. The State, may at its sole discretion, require the Vendor to submit invoices and supporting documentation electronically at any time during the term of this Agreement. These payments shall be deposited into the bank account of the Vendor's choice. The Vendor understands and agrees that the State is exempt from the payment of taxes. All payments shall be in United States currency.

B. METER READINGS: If applicable, the Customer shall provide accurate and timely meter readings at the end

of each applicable billing period on the forms or other alternative means specified by Vendor. Vendor shall have the right, upon reasonable prior notice to Customer, and during Customer's regular business hours, to inspect the equipment and to monitor the meter readings. If Customer meter readings are not received in the time to be agreed upon by the parties, the meter readings may be obtained electronically or by other means or may be estimated by Vendor subject to reconciliation when the correct meter reading is received by Vendor.

C. COPY CREDITS: If applicable, if a copier is being rented, the Customer will receive one (1) copy credit for each copy presented to Vendor which, in the Customer's opinion, is unusable and also for each copy which was produced during servicing of the equipment. Copy credits will be issued only if Vendor is responsible for providing equipment services or maintenance services (except time and materials maintenance). Copy credits will be reflected on the invoice as a reduction in the total copy volume, except for run length plans which will be credited at a specific copy credit rate as shown on the applicable price list.

9. USE OF EQUIPMENT: Customer shall operate the equipment according to the manufacturer's specifications and documented instructions. Customer agrees not to employ or use additional attachments, features or devices on the equipment or make changes or alterations to the equipment covered hereby without the prior written consent of Vendor in each case, which consent shall not be unreasonably withheld.

10. MAINTENANCE SERVICES, EXCLUSIONS, AND REMEDIES:

A. SERVICES: If Vendor is responsible for providing equipment services, maintenance services (except for time and materials), or warranty services: (1) Vendor shall install and maintain the equipment and make all necessary adjustments and repairs to keep the equipment in good working order. (2) Parts required for repair may be used or reprocessed in accordance with Vendor's specifications and replaced parts are the property of Vendor, unless otherwise specifically provided on the price lists. (3) Services will be provided during Customer's usual business hours. (4) If applicable, Customer will permit Vendor to install, at no cost to Customer, all retrofits designated by Vendor as mandatory or which are designed to insure accuracy of meters.

B. EXCLUSIONS: The following is not within the scope of services: (1) Provision and installation of optional retrofits. (2) Services connected with equipment relocation. (3) Installation/removal of accessories, attachments or other devices. (4) Exterior painting or refinishing of equipment. (5) Maintenance, installation or removal of equipment or devices not provided by Vendor. (6) Performance of normal operator functions as described in applicable Vendor operator manuals. (7) Performance of services necessitated by accident; power failure; unauthorized alteration of equipment or software; tampering; service by someone other than Vendor; causes other than ordinary use; interconnection of equipment by electrical, or electronic or mechanical means with noncompatible equipment, or failure to use operating system software. If Vendor provides, at the request of the Customer, any of the services noted above, the Customer may be billed by Vendor at a rate not to exceed the Master State Prices Agreement between the Vendor and the State of Mississippi, or in the absence of such agreement at the then current time and materials rates.

C. REMEDIES: If during the period in which Vendor is providing maintenance services, Vendor is unable to maintain the equipment in good working order, Vendor will, at no additional charge, provide either an identical replacement or another product that provides equal or greater capabilities.

11. HOLD HARMLESS: To the fullest extent allowed by law, Vendor shall indemnify, defend, save and hold harmless, protect, and exonerate the Customer and the State of Mississippi, its Commissioners, Board Members, officers, employees, agents, and representatives from and against all claims, demands, liabilities, suits, actions, damages, losses, and costs of every kind and nature whatsoever, including, without limitation, court costs, investigative fees and expenses, and attorneys' fees, arising out of or caused by Vendor and/or its partners, principals, agents, employees, and/or subcontractors in the performance of or failure to perform this Agreement. In the Customer's sole discretion, Vendor may be allowed to control the defense of any such claim, suit, etc. In the event Vendor defends said claim, suit, etc., Vendor shall use legal counsel acceptable to the Customer; Vendor shall be solely liable for all reasonable costs and/or expenses associated with such defense and the Customer shall be entitled to participate in said defense. Vendor shall not settle any claim, suit, etc., without the Customer's concurrence,

which the Customer shall not unreasonably withhold.

12. ALTERATIONS, ATTACHMENTS, AND SUPPLIES:

A. If Customer makes an alteration, attaches a device or utilizes a supply item that increases the cost of services, Vendor will either propose an additional service charge or request that the equipment be returned to its standard configuration or that use of the supply item be discontinued. If, within five (5) days of such proposal or request, Customer does not remedy the problem or agree in writing to do so within a reasonable amount of time, Vendor shall have the right to terminate this Agreement as provided herein. If Vendor believes that an alteration, attachment or supply item affects the safety of Vendor personnel or equipment users, Vendor shall notify Customer of the problem and may withhold maintenance until the problem is remedied.

B. Unless Customer has obtained title to the equipment free and clear of any Vendor security interest, Customer may not remove any ownership identification tags on the equipment or allow the equipment to become fixtures to real property.

13. ASSIGNMENT: The Vendor shall not assign, subcontract or otherwise transfer in whole or in part, its right or obligations under this Agreement without prior written consent of the Customer. Any attempted assignment or transfer without said consent shall be void and of no effect.

14. GOVERNING LAW: This Agreement shall be governed by and construed in accordance with the laws of the State of Mississippi, excluding its conflicts of laws provisions, and any litigation with respect thereto shall be brought in the courts of said state. The Vendor shall comply with applicable federal, state, and local laws and regulations.

15. NOTICE: Any notice required or permitted to be given under this Agreement shall be in writing and personally delivered or sent by certified United States mail, postage prepaid, return receipt requested, to the party to whom the notice should be given at the address set forth below. Notice shall be deemed given when actually received or when refused. The parties agree to promptly notify each other in writing of any change of address.

For the Vendor:	**For the Customer:**
Name ***David Gobbel***	Name
Title ***Government Account* Manager**	Title
Address ***PO Box 12262***	Address
City, State, & Zip Code ***MS 39236***	City, State, & Zip Code

16. WAIVER: Failure by the Customer at any time to enforce the provisions of this Agreement shall not be construed as a waiver of any such provisions. Such failure to enforce shall not affect the validity of this Agreement or any part thereof or the right of the Customer to enforce any provision at any time in accordance with its terms.

17. CAPTIONS: The captions or headings in this Agreement are for convenience only, and in no way define, limit or describe the scope or intent of any provision or section of this Agreement.

18. SEVERABILITY: If any term or provision of this Agreement is prohibited by the laws of the State of Mississippi or declared invalid or void by a court of competent jurisdiction, the remainder of this Agreement shall be valid and enforceable to the fullest extent permitted by law.

19. THIRD PARTY ACTION NOTIFICATION: Vendor shall give Customer prompt notice in writing of any action or suit filed, and prompt notice of any claim made against Vendor by any entity that may result in litigation related in any way to this Agreement.

20. AUTHORITY TO CONTRACT: Vendor warrants that it is a validly organized business with valid authority to enter into this Agreement and that entry into and performance under this Agreement is not restricted or prohibited by any loan,

security, financing, contractual or other agreement of any kind, and notwithstanding any other provision of this Agreement to the contrary, that there are no existing legal proceedings, or prospective legal proceedings, either voluntary or otherwise, which may adversely affect its ability to perform its obligations under this Agreement.

21. RECORD RETENTION AND ACCESS TO RECORDS: The Vendor agrees that the Customer or any of its duly authorized representatives at any time during the term of this Agreement shall have unimpeded, prompt access to and the right to audit and examine any pertinent books, documents, papers, and records of the Vendor related to the Vendor's charges and performance under this Agreement. All records related to this Agreement shall be kept by the Vendor for a period of three (3) years after final payment under this Agreement and all pending matters are closed unless the Customer authorizes their earlier disposition. However, if any litigation, claim, negotiation, audit or other action arising out of or related in any way to this Agreement has been started before the expiration of the three (3) year period, the records shall be retained for one (1) year after all issues arising out of the action are finally resolved. The Vendor agrees to refund to the Customer any overpayment disclosed by any such audit arising out of or related in any way to this Agreement.

22. EXTRAORDINARY CIRCUMSTANCES: If either party is rendered unable, wholly or in part, by reason of strikes, accidents, acts of God, weather conditions or any other acts beyond its control and without its fault or negligence to comply with any obligations or performance required under this Agreement, then such party shall have the option to suspend its obligations or performance hereunder until the extraordinary performance circumstances are resolved. If the extraordinary performance circumstances are not resolved within a reasonable period of time, however, the non-defaulting party shall have the option, upon prior written notice, of terminating the Agreement.

23. TERMINATION: This Agreement may be terminated as follows: (a) Customer and Vendor mutually agree to the termination, or (b) If either party fails to comply with the terms and conditions of this Agreement and that breach continues for thirty (30) days after the defaulting party receives written notice from the other party, then the non-defaulting party has the right to terminate this Agreement. The non-defaulting party may also pursue any remedy available to it in law or in equity. Upon termination, all obligations of Customer to make payments required hereunder shall cease.

24. AVAILABILITY OF FUNDS: It is expressly understood and agreed that the obligation of the Customer to proceed under this Agreement is conditioned upon the appropriation of funds by the Mississippi State Legislature and the receipt of state and/or federal funds. If the funds anticipated for the continuing fulfillment of the agreement are, at any time, not forthcoming or insufficient, either through the failure of the federal government to provide funds or of the State of Mississippi to appropriate funds or the discontinuance or material alteration of the program under which funds were provided or if funds are not otherwise available to the Customer, the Customer shall have the right upon ten (10) working days written notice to the Vendor, to terminate this Agreement without damage, penalty, cost or expenses to the Customer of any kind whatsoever. The effective date of termination shall be as specified in the notice of termination.

25. MODIFICATION OR RENEGOTIATION: This Agreement may be modified, altered or changed only by written agreement signed by the parties hereto. The parties agree to renegotiate the Agreement if federal, state and/or the Customer's revisions of any applicable laws or regulations make changes in this Agreement necessary.

26. WARRANTIES: Vendor warrants that the equipment, when operated according to the manufacturer's specifications and documented instructions, shall perform the functions indicated by the specifications and documented literature. Vendor may be held liable for any damages caused by failure of the equipment to function according to specifications and documented literature published by the manufacturer of the equipment.

27. E-VERIFY COMPLIANCE: If applicable, the Vendor represents and warrants that it will ensure its compliance with the Mississippi Employment Protection Act of 2008, Section 71-11-1, *et seq*. of the Mississippi Code Annotated (Supp 2008), and will register and participate in the status verification system for all newly hired employees. The term "employee" as used herein means any person that is hired to perform work within the State of Mississippi. As used herein, "status verification system" means the Illegal Immigration Reform and Immigration Responsibility Act of 1996 that is operated by the United States Department of Homeland Security, also known as the E-Verify Program, or any other successor electronic verification system replacing the E-Verify Program. The Vendor agrees to maintain records of such compliance and, upon request of the State and

approval of the Social Security Administration or Department of Homeland Security, where required, to provide a copy of each such verification to the Customer. The Vendor further represents and warrants that any person assigned to perform services hereafter meets the employment eligibility requirements of all immigration laws of these warranties, the breach of which may subject the Vendor to the following: (1) termination of this Agreement and ineligibility for any state or public contract in Mississippi for up to three (3) years, with notice of such cancellation/termination being made public, or (2) the loss of any license, permit, certification or other document granted to the Vendor by an agency, department or governmental entity for the right to do business in Mississippi for up to one (1) year, or (3) both --in the event of such cancellation/termination, the Vendor would also be liable for any additional costs incurred by the Customer due to the contract cancellation or loss of license or permit.

28. HARD DRIVE SECURITY: Vendor must properly format the hard drive, deleting all information, or replace the hard drive with a new hard drive prior to storing or re-selling the equipment. The Customer may request to retain the hard drive for a nominal fee. Vendor will supply written notification to the Customer that all data has been made inaccessible. This notification must be provided with forty-five (45) days of the equipment being returned to the Vendor.

29. ENTIRE AGREEMENT: This Agreement constitutes the entire agreement of the parties with respect to the equipment, software or services described herein and supersedes and replaces any and all prior negotiations, understandings and agreements, written or oral, between the parties relating hereto. No terms, conditions, understandings, usages of the trade, course of dealings or agreements, not specifically set out in this Agreement or incorporated herein, shall be effective or relevant to modify, vary, explain or supplement this Agreement.

30. TRANSPARENCY: This Agreement, including any accompanying exhibits, attachments, and appendices, is subject to the "Mississippi Public Records Act of 1983," codified as Section 25-61-1 et seq., Mississippi Code Annotated and exceptions found in Section 79-23-1 of the Mississippi Code Annotated (1972, as amended). In addition, this Agreement is subject to provisions of the Mississippi Accountability and Transparency Act of 2008 (MATA), codified as Section 27-104-151 of the Mississippi Code Annotated (1972, as amended). Unless exempted from disclosure due to a court-issued protective order, this Agreement is required to be posted to the Department of Finance and Administration's independent agency contract website for public access. Prior to posting the Agreement to the website, any information identified by the Vendor as trade secrets, or other proprietary information including confidential vendor information, or any other information which is required confidential by state or federal law or outside the applicable freedom of information statutes will be redacted. A fully executed copy of this Agreement shall be posted to the State of Mississippi's accountability website at: http://www.transparency.mississippi.gov.

31. COMPLIANCE WITH LAWS: The Vendor understands that the Customer is an equal opportunity employer and therefore maintains a policy which prohibits unlawful discrimination based on race, color, creed, sex, age, national origin, physical handicap, disability, genetic information, or any other consideration made unlawful by federal, state, or local laws. All such discrimination is unlawful and the Vendor agrees during the term of the Agreement that the Vendor will strictly adhere to this policy in its employment practices and provision of services. The Vendor shall comply with, and all activities under this Agreement shall be subject to, all applicable federal, State of Mississippi, and local laws and regulations, as now existing and as may be amended or modified.

For the faithful performance of the terms of this Agreement, the parties have caused this Agreement to be executed by their undersigned representatives.

Witness my signature this the 30TH day of NOVEMBER, 2020.

Vendor: Pitney Bowes

By: JACOB LEONARD
Authorized Signature

Printed Name: JACOB LEONARD

Title: Government Account Manager

WITNESS:

_____

_____

Witness my signature this the _____ day of _____, 20____.

Customer: _____

By: _____
Authorized Signature

Printed Name: _____

Title: _____

WITNESS:

_____

_____

EXHIBIT A
RENTAL AGREEMENT
FOR USE BY
MISSISSIPPI Agencies AND VENDORS
(Applicable to Equipment Rental Transactions)

The following, when signed by the Customer and the Vendor shall be considered to be a part of the Rental Agreement between the parties.

State Contract Number: 820051340

Company Name: Pitney Bowes

Customer Agency Name: CITY OF GAUTIER

Bill to Address: PO BOX 670, GAUTIER, MS 39553-0670 United States

Ship to Address: 3330 HIGHWAY 90, GAUTIER, MS 39553-5124 United States

Description of Equipment, Software, or Services	Price
7H00 - IMI SERIES METER	179.18 A MONTH
STDSLA - STANDARD SERVICE LEVEL AGREEMENT	

Delivery Schedule and Installation Date:

Rental Term: (Number of Months) 60 MONTHS
Start Date: 1/20/21
End Date: 1/19/2026

Modifications:

Vendor Signature

JACOB LEONARD
Customer Signature

There came for consideration of the Mayor and Members of the Council of the City of Gautier, Mississippi, the following:

ORDER NUMBER 506-2020

WHEREAS, the Court Clerk, Michael Steward attended the Municipal Court Clerk Conference held virtually via Zoom, September 16-18, 2020, and pursuant to statute, the Certification of Attendance must be accepted by the City Council;

IT IS HEREBY ORDERED by the Mayor and Members of the Council of the City of Gautier, Mississippi, that the Certificate of Attendance from the Municipal Court Clerk Conference held virtually via Zoom, September 16-18, 2020 for Michael Steward, Gautier Municipal Court Clerk is hereby accepted.

IT IS FURTHER ORDERED that the certificate of completion shall be made a permanent record of the minutes of the City Council in the municipality from which the municipal clerk is appointed. Miss. Code Ann. § 21-23-12.

IT IS FURTHER ORDERED that the City Manager or City Clerk is authorized to execute any and all documents necessary.

Motion was made by **Councilman Vaughan,** seconded by **Councilwoman Martin,** and the following vote was recorded:

AYES: **Phil Torjusen**
Mary Martin
Cameron George
Richard Jackson
Casey Vaughan
Rusty Anderson
Adam Colledge

NAYS: **None**

_____
MAYOR

ATTEST:

_____
CITY CLERK

Passed and Adopted by Mayor and Members of the Council of the City of Gautier, Mississippi, at the meeting of December 15, 2020.

Certificate of Attendance

The University of Mississippi Law Center
Awards this Certificate to

Michael Steward

for having attended the

2020 MUNICIPAL COURT CLERK CONFERENCE

Via Zoom

September 16-18, 2020

conducted by the

Mississippi Judicial College

Duplicate Copy

Program Manager

Director

There came for consideration of the Mayor and Members of the Council of the City of Gautier, Mississippi, the following:

ORDER NUMBER 507-2020

WHEREAS, Miss. Code Ann. 21-35-13 requires a budget report to be presented to the governing authority at the regular meeting each month.

IT IS HEREBY ORDERED by the Mayor and Members of the Council of the City of Gautier, Mississippi, that the Finance Report for September 2020 is hereby received.

IT IS FURTHER ORDERED that the City Manager or City Clerk is authorized to execute any and all documents necessary.

Motion was made by **Councilman Vaughan,** seconded by **Councilwoman Martin,** and the following vote was recorded:

AYES: **Phil Torjusen**
Mary Martin
Cameron George
Richard Jackson
Casey Vaughan
Rusty Anderson
Adam Colledge

NAYS: **None**

_____
MAYOR

ATTEST:

_____
CITY CLERK

Passed and Adopted by the Mayor and Members of the Council of the City of Gautier, Mississippi, at the meeting December 15, 2020.

SEP 2020 Ending Cash Balances

GENERAL DEPOSITORY

Fund Name		Account #	Balance
General Fund	Depository Account	001-000-001	$4,264,578.89
MS Development Loan Katrina	Depository Account	007-000-001	
CDBG-Downtown Revitalization	Depository Account	012-000-001	
Transportation Enhancement	Depository Account	013-000-001	
Allen Road Widening	Depository Account	020-000-001	
MDOT Safe Routes to School	Depository Account	029-000-001	
MDAH School House Grant	Depository Account	030-000-001	$2,983.43
MDMR City Pk Boat Launch Imp	Depository Account	050-000-001	
Martin Bluff Road Improvements	Depository Account	128-000-001	
SE MS METRO TASK FORCE	Depository Account	156-000-001	$300,726.66
U S Justice Equitable Sharing	Depository Account	157-000-001	$86,273.95
Fire Protection Fund	Depository Account	160-000-001	$251,814.17
Tidelands Grant	Depository Account	171-000-001	$24,960.95
Library Support Fund	Depository Account	172-000-001	$6,902.63
MSWFP Recreation Trails Grant	Depository Account	175-000-001	
Shepard State Park Fund	Depository Account	176-000-001	$60,478.75
USDA NRCS EWP Program	Depository Account	300-000-001	$43,916.51
Pine Cone Drive Spillway	Depository Account	301-000-001	
Robert Hiram Bridge Sheet Pile Wall	Depository Account	302-000-001	
MDOT TA Grant: Martin Bluff Sidewalk	Depository Account	303-000-001	$452,086.65
Solid Waste Fund	Depository Account	404-000-001	$104,760.37
EPA: Brownfields Assessment	Depository Account	409-000-001	
	General Ledger Cash Balance		$5,599,482.96
	General Depository Reconciled Cash Balance		**$5,598,702.50**

ENTERPRISE FUND

Fund Name		Account #	Balance
Elevated Water Tank	Enterprise Account	350-000-002	$129,112.00
Bemis Sewer Project	Enterprise Account	351-000-002	
OST-GV Sewer Improvements	Enterprise Account	360-000-002	$513.50
Water & Sewer Utility	Enterprise Account	400-000-002	$3,554,525.81
MDB Loan: Water Ion-X Project	Enterprise Account	421-000-002	$47,562.52
Water Meter Project	Enterprise Account	422-000-002	
Hurricane Katrina (PW Bldg)	Enterprise Account	449-000-002	
	General Ledger Cash Balance		$3,731,713.83
	Enterprise Reconciled Cash Balance		**$3,727,950.69**

BOND & RESTRICTED FUNDS

Fund Name		Account #	Balance
7M GO Bond S2010	Bond Fund	130-000-001	$1,291,177.51
W&S Bond S2018-S2019: Debt Service	Debt Service Fund	250/252-000-007	$422,802.46
W&S Bond S2018-S2019: DS Reserve	Restricted Fund	251/253-000-003	$723,115.37
W&S Bond S2018-S2019: Contingency	Restricted Fund	251/253-000-005	$20,391.77
W&S Bond S2018-S2019: Depreciation	Restricted Fund	251/253-000-009	$20,391.77
Infrastructure Imp Funds: Town Commons	Restricted Fund	304-000-004	$491,891.91
S2019 Construction Fund MPI GO Bond	Bond Fund	Funds 304-308	$2,977,091.50
S2019 Cash w/ Fiscal Agent (Debt Service)	Restricted Fund	305-000-014	$38,564.34
W&S Bond S2018-S2019: Construction	Bond Fund	Funds 351-358	$7,033,148.46
MS Dev Bank SO Bond S2013: DS Reserve	Restricted Fund	497-000-001	$272,354.36
Customer Meter Deposit Funds	Restricted Fund	406-000-001	$810,709.61
	Total Bond & Restricted Reconciled Cash Balances		**$14,101,639.06**

SEP 2020
YEAR TO DATE TOTALS

General Fund Totals

		BUDGET FY 2020	SEP 2020	Balance	100.0% % to date
	General Fund Revenues	10,562,706.00	10,896,268.60	(333,562.60)	103.1%
	Expenditures:				
001	Legislative	172,865.00	168,067.40	4,797.60	97.2%
010	City Court	321,259.00	267,175.29	54,083.71	83.1%
021	City Manager	253,109.00	237,158.32	15,950.68	93.6%
022	Human Resources	64,635.00	62,568.48	2,066.52	96.8%
040	City Clerk	232,877.00	222,057.42	10,819.58	95.3%
045	Finance	277,960.00	276,473.83	1,486.17	99.4%
060	City Attorney	126,000.00	120,284.58	5,715.42	95.4%
090	Economic Dev - Planning	373,274.00	349,504.35	23,769.65	93.6%
092	Building & General Expenses	613,600.00	561,699.40	51,900.60	91.5%
094	Grants & Project Admin	197,862.00	188,452.08	9,409.92	95.2%
100	Police	3,683,650.00	3,329,648.27	354,001.73	90.3%
161	Fire	2,650,678.00	2,294,373.61	356,304.39	86.5%
170	Recreation	590,586.00	515,038.40	75,547.60	87.2%
201	PW: Streets	264,000.00	134,193.40	129,806.60	50.8%
205	PW: Maintenance	232,837.00	214,623.08	18,213.92	92.1%
900	Interfund Transfers	911,713.00	816,996.86	94,716.14	89.6%
	General Fund Expenditures	10,966,905.00	9,758,314.77	1,208,590.23	88.9%
	Total Operating Expenditures	9,643,922.00	8,563,446.48	1,080,475.52	
	Total Capital Outlay Expenditures	304,000.00	270,604.27	33,395.73	
	Total Debt Service	107,270.00	107,267.16	2.84	
	Total Transfers Out	911,713.00	816,996.86	94,716.14	
	Total Unappropriated	0.00	0.00	0.00	
	Check Total	10,966,905.00	9,758,314.77	1,208,590.23	
	Personnel	7,565,912.00	7,031,044.49	534,867.51	
	Supplies	544,912.00	334,462.57	210,449.43	
	Other Services	1,533,098.00	1,197,939.42	335,158.58	
	Capital Outlay	304,000.00	270,604.27	33,395.73	
	Debt Service	107,270.00	107,267.16	2.84	
	Interfund Transfers for DS	911,713.00	816,996.86	94,716.14	
	Unappropriated	0.00	0.00	0.00	
	Check Total	10,966,905.00	9,758,314.77	1,208,590.23	

SEP 2020
YEAR TO DATE TOTALS

Special Funds	BUDGET FY 2020	As of SEP 2020	Balance	100.0% % to date
007 MS Dev 2.36M Katrina Bonds				
Revenues	280,000.00	279,911.95	88.05	99.9%
Expenditures	280,394.00	280,343.75	50.25	99.9%
013 TE-Downtown Revitalization				
Revenues	40,971.45	40,971.45	0.00	100.0%
020 Allen Road Widening				
Revenues	46,324.00	46,323.96	0.04	99.9%
Expenditures	46,324.00	46,323.96	0.04	99.9%
030 MDAH 2014 Community Heritage				
Revenues	0.00	0.00	0.00	
Expenditures	2,983.43	0.00	2,983.43	
128 Martin Bluff Road Project				
Expenditures	102,012.64	102,012.64	0.00	100.0%
130 $7M GO Bond - Capital Improvements				
Revenues	4,356,310.71	518,621.34	3,837,689.37	11.9%
Expenditures	5,662,781.58	535,248.17	5,127,533.41	9.4%
156 SE MS METRO TASK FORCE				
Revenues	320,914.60	320,915.04	(0.44)	100.0%
Expenditures	320,914.60	21,174.18	299,740.42	6.5%
157 US Justice Equitable Sharing				
Revenues	207,649.60	1,440.00	206,209.60	0.6%
Expenditures	360,041.60	311,173.84	48,867.76	86.4%
160 Fire Protection Fund				
Revenues	109,000.00	112,041.77	(3,041.77)	102.7%
Expenditures	185,991.43	102,753.70	83,237.73	55.2%
171 Combined Tidelands Grant				
Revenues	358,148.07	163,620.75	194,527.32	45.6%
Expenditures	326,065.15	106,576.88	219,488.27	32.6%
172 Library Support Fund				
Revenues	121,494.00	116,146.28	5,347.72	95.5%
Expenditures	121,494.00	121,492.59	1.41	99.9%
176 Shepard State Park				
Revenues	105,320.00	99,218.50	6,101.50	94.2%
Expenditures	145,057.00	112,576.45	32,480.55	77.6%
250 2018 W&S Bond Debt Service				
Revenues	352,000.00	255,009.66	96,990.34	72.4%
Expenditures	286,782.00	286,781.26	0.74	99.9%

SEP 2020
YEAR TO DATE TOTALS

Special Funds	BUDGET FY 2020	As of SEP 2020	Balance	*100.0% % to date*
251 2018 W&S Bond Debt Serv Reserve				
Revenues	24,758.00	13,001.37	11,756.63	*52.5%*
Expenditures	9,758.00	9,613.80	144.20	*98.5%*
252 2019 W&S Bond Debt Service				
Revenues	308,800.00	308,610.37	189.63	*99.9%*
Expenditures	308,800.00	0.00	308,800.00	
253 2019 W&S Bond Debt Serv Reserve				
Revenues	438,294.00	438,311.17	(17.17)	*100.0%*
Expenditures	438,294.00	2,161.84	436,132.16	*0.4%*
300 USDA-NRCS EWP				
Revenues	176,191.78	132,973.25	43,218.53	*75.4%*
Expenditures	161,250.00	108,863.90	52,386.10	*67.5%*
301 Pine Cone Drive Spillway				
Expenditures	43,160.53	43,160.53	0.00	*100.0%*
303 MDOT-TA Grant: Martin Bluff Sidewalk				
Revenues	602,012.64	102,012.64	500,000.00	*16.9%*
Expenditures	1,002,864.25	53,423.39	949,440.86	*5.3%*
304 Town Commons Park Project				
Revenues	1,107,590.98	166,176.60	941,414.38	*15.0%*
Expenditures	3,231,404.17	296,426.10	2,934,978.07	*9.1%*
305 S2019 MPI GO Bond Construction Fund				
Revenues	214,841.00	65,357.98	149,483.02	*30.4%*
Expenditures	322,244.48	254,007.54	68,236.94	*78.8%*
306 Welcome Center PII (SSP)				
Revenues	225,591.30	221,200.00	4,391.30	*98.0%*
Expenditures	522,316.30	517,826.25	4,490.05	*99.1%*
307 Bacot Park Improvements				
Revenues	0.00	12,926.33	(12,926.33)	
Expenditures	1,687,250.00	93,500.00	1,593,750.00	*5.5%*
308 Boardwalk - Shepard State Park				
Revenues	482,059.00	23,700.00	458,359.00	*4.9%*
Expenditures	677,509.00	456,104.25	221,404.75	*67.3%*
350 Elevated Water Tank				
Revenues	591,000.00	591,000.00	0.00	*100.0%*
Expenditures	1,216,012.00	1,123,050.00	92,962.00	*92.3%*
351 Bemis Sewer Project				
Revenues	382,383.58	382,383.58	0.00	*100.0%*
Expenditures	580,701.65	580,701.65	0.00	*100.0%*

SEP 2020
YEAR TO DATE TOTALS

Special Funds	BUDGET FY 2020	As of SEP 2020	Balance	*100.00% % to date*
352 2018 Bond General Construction/Admin				
Revenues	840,371.70	832,409.09	7,962.61	*99.0%*
Expenditures	1,277,225.70	0.00	1,277,225.70	
353 Hwy 57 Utility Line Relocation				
Revenues	229,805.70	323,257.35	(93,451.65)	*140.6%*
Expenditures	1,194,822.00	1,122,293.35	72,528.65	*93.9%*
354 Robinson Still Road Utility Extension				
Revenues	0.00	0.00	0.00	
Expenditures	565,898.00	565,898.00	0.00	*100.0%*
355 Water Supply & Treatment Plant				
Revenues	5,486,506.00	5,486,506.00	0.00	*100.0%*
Expenditures	5,986,306.00	472,130.72	5,514,175.28	*7.8%*
358 2019 Bond General Construction/Admin				
Revenues	6,030,400.00	6,030,399.75	0.25	*99.9%*
Expenditures	6,030,400.00	6,030,399.75	0.25	*99.9%*
360 OST-GV SEWER IMPROVEMENTS				
Revenues	2,327,950.00	368,872.60	1,959,077.40	*15.8%*
Expenditures	2,327,950.00	380,845.60	1,947,104.40	*16.3%*
404 Solid Waste Fund				
Revenues	1,586,240.00	1,559,767.58	26,472.42	*98.3%*
Expenditures	1,625,240.00	1,624,701.98	538.02	*99.9%*
421 MSB - Water Ionization Plant				
Expenditures	56,287.52	8,725.00	47,562.52	*15.5%*
497 DS Fund: 2013 SO Bond				
Revenues	5,200.00	2,029.51	3,170.49	*39.0%*
Expenditures	6,000.00	2,895.50	3,104.50	*48.2%*

SEP 2020
YEAR TO DATE TOTALS

ENTERPRISE FUND (400)	BUDGET FY 2020	SEP 2020	Balance	100.0% % to date
Utility Fund Revenues	9,001,000.00	9,063,588.25	(62,588.25)	100.6%
Administration	2,916,183.00	2,836,854.57	79,328.43	97.2%
Water & Sewer O & M	3,286,002.00	3,048,253.06	237,748.94	92.7%
Debt Service	1,077,284.00	1,072,254.81	5,029.19	99.5%
Transfers	1,516,808.00	1,516,808.00	0.00	100.0%
Contingencies	200,000.00	0.00	200,000.00	
Utility Fund Expenditures	8,996,277.00	8,474,170.44	522,106.56	94.1%
Total Operating Expenditures	*6,080,185.00*	*5,800,722.65*	*279,462.35*	
Total Capital Outlay Expenditures	*122,000.00*	*84,384.98*	*37,615.02*	
Total Debt Service	*1,077,284.00*	*1,072,254.81*	*5,029.19*	
Total Interfund Transfers	*1,516,808.00*	*1,516,808.00*	*0.00*	
Total Contingency Expenditures	*200,000.00*	*0.00*	*200,000.00*	
Check Total	*8,996,277.00*	*8,474,170.44*	*522,106.56*	
Personnel	*418,444.00*	*412,245.69*	*6,198.31*	
Supplies	*269,000.00*	*194,562.69*	*74,437.31*	
Other Services	*5,392,741.00*	*5,193,914.27*	*198,826.73*	
Capital Outlay	*122,000.00*	*84,384.98*	*37,615.02*	
Debt Service	*1,077,284.00*	*1,072,254.81*	*5,029.19*	
Interfund Transfers	*1,516,808.00*	*1,516,808.00*	*0.00*	
Contingencies	*200,000.00*	*0.00*	*200,000.00*	
Check Total	*8,996,277.00*	*8,474,170.44*	*522,106.56*	

Councilman Vaughan made the motion to pay an invoice, when received from Kelly Novak, in an amount of $1,500.00 for the artwork design and painting for the Martin Bluff/Hickory Hills Golf Course Sign. Councilman Colledge seconded the motion. The vote was carried unanimously.

Councilman Vaughan made the motion to Adjourn until January 5, 2021 at 6:30 pm. Councilman Jackson seconded the motion. The vote was carried unanimously.

_____

MAYOR

ATTEST:

_____

CITY CLERK

Submitted for approval of the Mayor and Members of the Council of the City of Gautier, Mississippi, at the meeting of January 5, 2021.

CITY OF GAUTIER, MISSISSIPPI
STUDY AGENDA
January 5, 2021

ITEM DESCRIPTION:

Citizen Comments

City Council Comments

City Manager Comments

City Clerk Comments

City Attorney Comments

NOTES: